bag DESIGN

2026

Photo: Opus Hammered Darcy Gold

index

Who we are 5
Let's create 7

basic series
Ecoline collection 10
Timeless collection 22

premium series
Algar collection 36
Atlas collection 44
Dune collection 50
Naturecast® collection 58
Nucast® collection 62
Opus collection 66
Polystone collection 74
Raindrop collection 82
Seren collection 88
Terrazzo collection 92
Tornado collection 98
Tortuga collection 104
Vertical Rib collection 110

luxe series
Gradient collection 116
Lava collection 126
Metallic collection 134
Polystone Coated collection 146
Sandora collection 156

accessories
Liners 162
Ecoline accessories 16
Timeless accessories 27
Gradient accessories 119

icons

- Indoor
- Outdoor
- UV resistant
- Frost resistant
- Waterproof
- Handmade
- Recycled material
- With liner
- With drainage hole
- Fire retardant
- RAL + BAQ colours

© Nieuwkoop Europe 2025

Photo: Polystone Nathan James Balloon Pueter Champagne

Who we are

Baq stands for high-quality planters that are meticulously designed and expertly crafted. Available in a wide range of materials, each Baq planter has its own unique look, which makes for a highly diverse collection. Ranging from contemporary to timeless, from rugged to refined, and from bright colours to subtle minimalism. There's a planter for every plant and interior. Whichever model you choose, a Baq planter will make for a striking addition to your interior or outdoor space.

Photo: Gradient Balloon Matt Honey

Let's create

With innovative ideas and smart new techniques, we create surprising designs and practical accessories that make your plants pop while lifting up your interior. A Baq planter will bring out the natural beauty of your greenery, making your home an even more pleasant place to stay. The whole inspires and stimulates the creative mind.

As several of our collections are handmade and crafted from natural materials, slight variations may occur compared to the images in this brochure. We see this as a mark of authenticity, underlining the unique character of each product. Our collections continue to evolve, which means designs and specifications may be subject to change without prior notice.

basic series

The basic series stands for timeless functionality and accessible design. Crafted from durable yet lightweight materials, these planters are designed for everyday versatility, indoors or out. Their neutral aesthetic and modern lines offer a subtle complement to any space, blending seamlessly with diverse interiors and exteriors. Reliable, low-maintenance, and attractively priced, the basic series delivers effortless style for a broad audience.

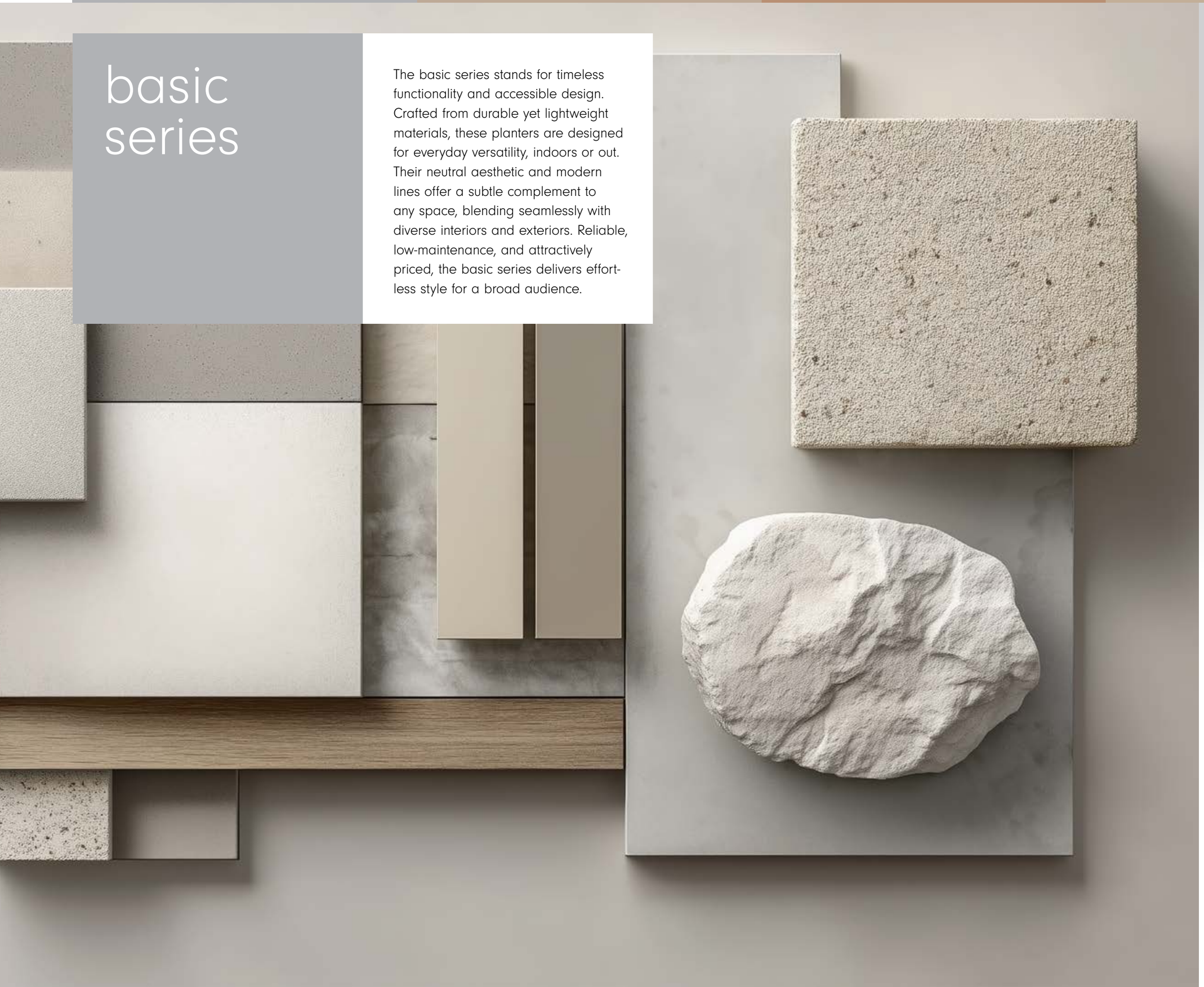

Ecoline

Timeless

Sustainability brought to life in pure, versatile shapes.

basic series

Ecoline collection

Ecoline planters are made from recycled plastic. The materials originate from products that have already served their purpose in life, such as old car bumpers, phones, keyboards, computers and vacuum cleaners. These products are shredded, heated and moulded into a new shape. This gives used products a second life. The planters are available in all RAL colours* and with handy accessories.

*With the exception of the mother-of-pearl and fluor colours.

Photo: Ecoline Rise Regular Partner Straight

basic series

Ecoline collection

Rise Regular

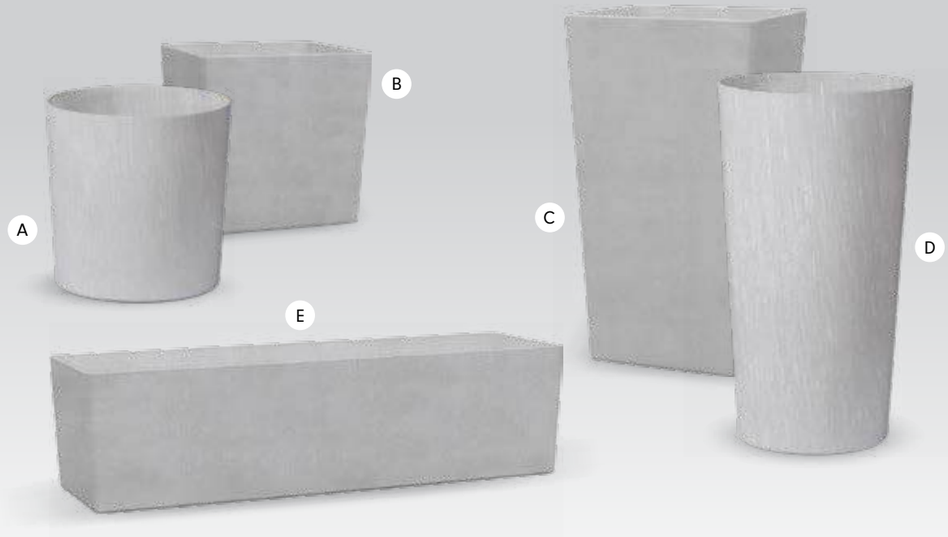

A **Couple Straight**

ART. CODE	⌀	⌀	!	WHEELPLATE	LINER HYDRO
6ECOC4042	39	40	40	6ECOAR015	6ECOAR008
6ECOC5054	49	50	50	6ECOAR014	6ECOAR009

B **Cube**

ART. CODE	↔	↗	!	WHEELPLATE	LINER HYDRO
6ECOC2224	22	22	22		
6ECOC4142	41	41	40	6ECOAR018	6ECOAR005
6ECOC5052	50	50	50	6ECOAR016	6ECOAR006

C **Kubis**

ART. CODE	↔	↗	!	WHEELPLATE	LINER SOIL	LINER HYDRO	IRRIGATION SYSTEM
6ECOK3672	36	36	70	6ECOAR017		6ECOAR002	
6ECOK4177	41	41	75	6ECOAR018	6ECOAR012	6ECOAR003	6ECOAP015

D **Partner Straight**

ART. CODE	⌀	⌀	!	WHEELPLATE	LINER SOIL	LINER HYDRO	IRRIGATION SYSTEM
6ECOP4077	39	40	75	6ECOAR015	6ECOAR010	6ECOAR001	6ECOAP017

E **Rectangle**

ART. CODE	↔	↗	!	WHEELPLATE	LINER HYDRO
6ECOR6020	60	18	16		
6ECOR8023	80	20	23		
6ECOR9042	90	40	60	6ECOAR013	6ECOAR007

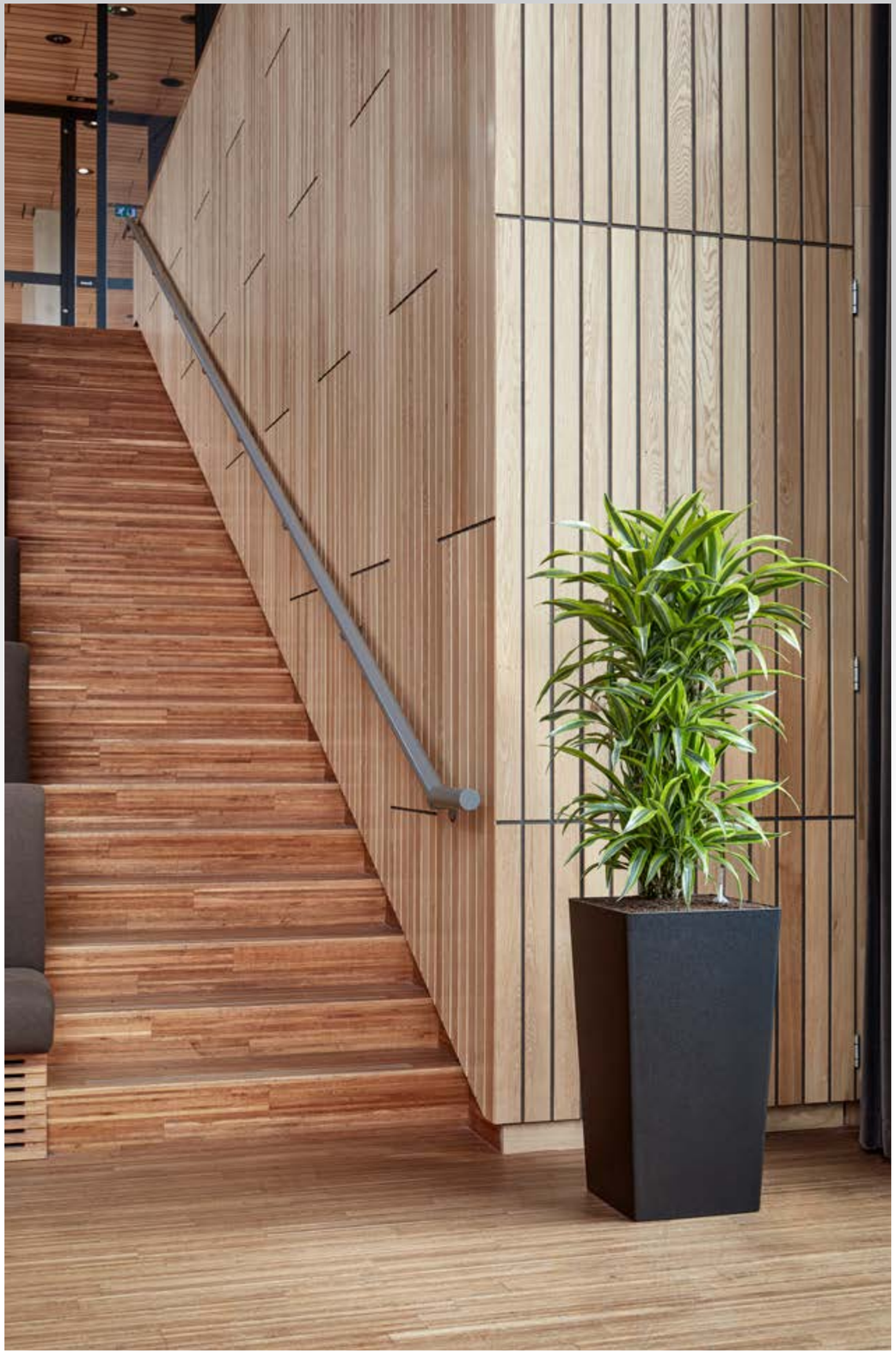

Photo: Ecoline Rise Structure Kubis

basic series

Ecoline collection

Rise Structure

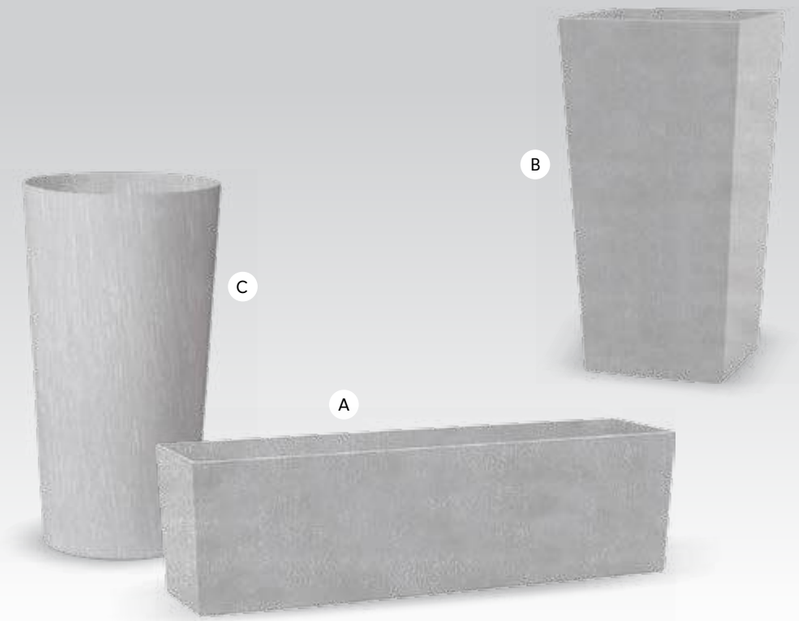

A **Rectangle**

ART. CODE	↔	↗		WHEELPLATE	LINER HYDRO
6ECOR6018	60	18	16		
6ECOR8020	80	20	23		
6ECOR9040	90	40	60	6ECOAR013	6ECOAR007

B **Kubis**

ART. CODE	↔	↗		WHEELPLATE	LINER SOIL	LINER HYDRO	IRRIGATION SYSTEM
6ECOK4175	41	41	75	6ECOAR018	6ECOAR012	6ECOAR003	6ECOAP015

C **Partner Straight**

ART. CODE	⌀	⌀		WHEELPLATE	LINER SOIL	LINER HYDRO	IRRIGATION SYSTEM
6ECOP4075	39	40	75	6ECOAR015	6ECOAR010	6ECOAR001	6ECOAP017

basic series

Ecoline collection

Rise Accessories

A

B

C

G

H

D

E

F

I

A **Liner Hydro Round**

ART. CODE	⌀	⌀	↕	MATCHING PLANTER		
6ECOAR001	36	39	69	6ECOP4075	6ECOP4077	

B **Liner Hydro Round**

ART. CODE	⌀	⌀	↕	MATCHING PLANTER	
6ECOAR008	36	39	34	6ECOC4042	
6ECOAR009	45	49	44	6ECOC5054	

C **Liner Hydro Square**

ART. CODE	↔	↗	↕	MATCHING PLANTER		
6ECOAR005	40	40	34	6ECOC4142		
6ECOAR006	49	49	44	6ECOC5052		
6ECOAR002	34	34	64	6ECOK3672		
6ECOAR003	40	40	69	6ECOK4175	6ECOK4176	6ECOK4177

D **Liner Hydro Rectangle**

ART. CODE	↔	↗	↕	MATCHING PLANTER	
6ECOAR007	89	39	54	6ECOR9040	6ECOR9042

E **Liner Soil Round**

ART. CODE	⌀	⌀	↕	MATCHING PLANTER	
6ECOAR010	36	39	70	6ECOP4075	6ECOP4077

F **Liner Soil Square**

ART. CODE	↔	↗	↕	MATCHING PLANTER		
6ECOAR012	40	40	70	6ECOK4175	6ECOK4176	6ECOK4177

G **Wheelplate Rectangle**

ART. CODE	↔	↗	↕	MATCHING PLANTER	
6ECOAR013	78	28	5	6ECOR9040	6ECOR9042

H **Wheelplate Round**

ART. CODE	⌀	↕	MATCHING PLANTER		
6ECOAR015	29	2	6ECOC4042	6ECOP4075	6ECOP4077
6ECOAR014	38	5	6ECOC5054		

I **Wheelplate Square**

ART. CODE	↔	↗	↕	MATCHING PLANTER		
6ECOAR017	24	24	5	6ECOK3672		
6ECOAR018	29	29	5	6ECOC4142	6ECOK4175	6ECOK4177
6ECOAR016	38	38	5	6ECOC5052		

Photo: Ecoline Phoenix Regular Partner Straight

basic series

Ecoline collection

Phoenix Regular

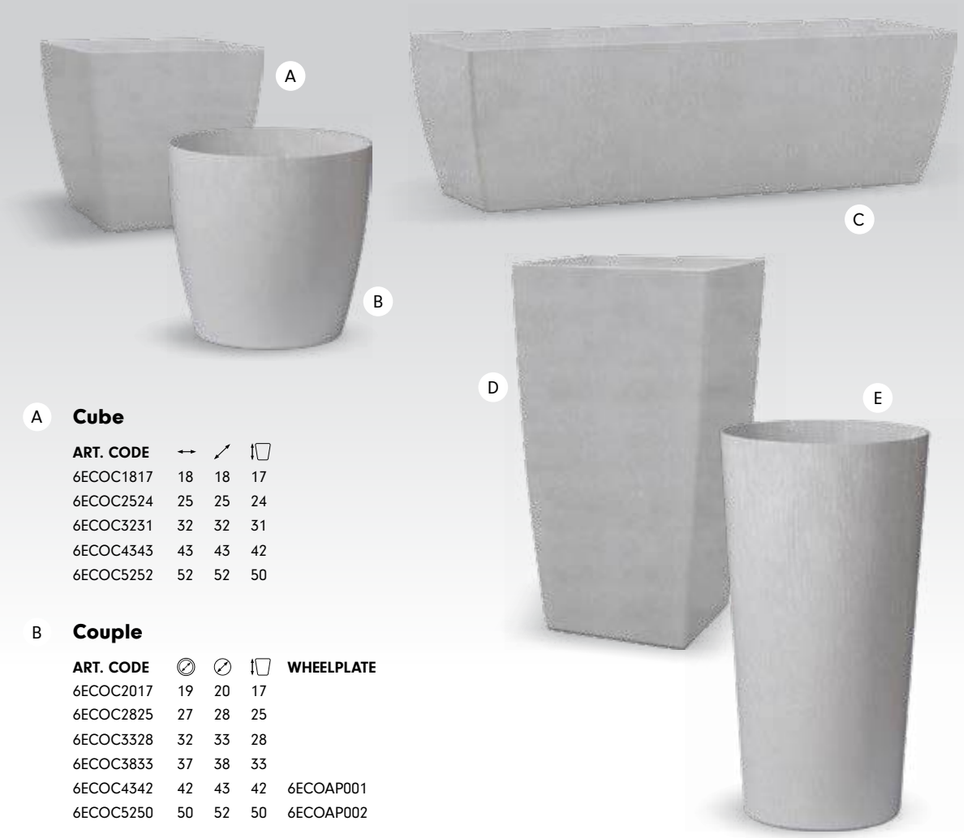

A Cube

ART. CODE	↔	⟋	
6ECOC1817	18	18	17
6ECOC2524	25	25	24
6ECOC3231	32	32	31
6ECOC4343	43	43	42
6ECOC5252	52	52	50

B Couple

ART. CODE	⌀	⊘		WHEELPLATE
6ECOC2017	19	20	17	
6ECOC2825	27	28	25	
6ECOC3328	32	33	28	
6ECOC3833	37	38	33	
6ECOC4342	42	43	42	6ECOAP001
6ECOC5250	50	52	50	6ECOAP002

C Rectangle

ART. CODE	↔	⟋	
6ECOR6218	60	20	18

D Kubis

ART. CODE	↔	⟋		WHEELPLATE	LINER SOIL	LINER HYDRO	IRRIGATION SYSTEM	POLYSTYRENE BASE
6ECOK3056	30	30	56		6ECOAP003			6ECOAP019
6ECOK4176	41	41	76	6ECOAP020	6ECOAR012	6ECOAR003	6ECOAP015	
6ECOK4991	49	49	91		6ECOAP004		6ECOAP015	

E Partner Straight

ART. CODE	⌀	⊘		LINER SOIL	LINER HYDRO	IRRIGATION SYSTEM	POLYSTYRENE BASE
6ECOP3366	32	33	66	6ECOAP005			6ECOAP018
6ECOP4176	39	41	76	6ECOAP006	6ECOAP007	6ECOAP017	
6ECOP4191	39	41	91	6ECOAP008	6ECOAP009	6ECOAP017	

basic series

Ecoline collection

Phoenix Accessories

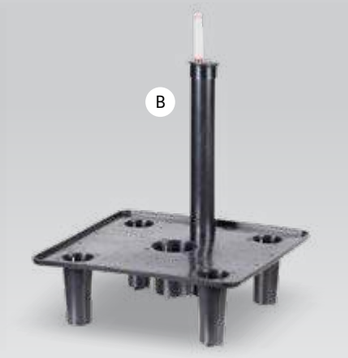

A **Irrigation System Round**

ART. CODE	⌀	↕	MATCHING PLANTER			
6ECOAP017	33	10	6ECOP4075	6ECOP4077	6ECOP4176	6ECOP4191

B **Irrigation System Square**

ART. CODE	↔	↗	↕	MATCHING PLANTER			
6ECOAP015	33	33	10	6ECOK4175	6ECOK4177	6ECOK4176	6ECOK4991

C **Liner Hydro Round**

ART. CODE	⌀	⌀	↕	MATCHING PLANTER
6ECOAP007	36	39	74	6ECOP4176
6ECOAP009	36	39	90	6ECOP4191

D **Liner Soil Round**

ART. CODE	⌀	⌀	↕	MATCHING PLANTER
6ECOAP005	28	32	65	6ECOP3366
6ECOAP006	36	39	75	6ECOP4176
6ECOAP008	36	39	90	6ECOP4191

E **Liner Hydro Square**

ART. CODE	↔	↗	↕	MATCHING PLANTER		
6ECOAR003	40	40	69	6ECOK4175	6ECOK4176	6ECOK4177

F **Liner Soil Square**

ART. CODE	↔	↗	↕	MATCHING PLANTER
6ECOAP003	29	29	55	6ECOK3056
6ECOAP004	47	47	89	6ECOK4991

G **Polystyrene Base Round**

ART. CODE	⌀	↕	MATCHING PLANTER
6ECOAP018	25	10	6ECOP3366

H **Polystyrene Base Square**

ART. CODE	↔	↗	↕	MATCHING PLANTER
6ECOAP019	22	22	6	6ECOK3056

I **Wheelplate Round**

ART. CODE	⌀	↕	MATCHING PLANTER
6ECOAP001	27	5	6ECOC4342
6ECOAP002	31	5	6ECOC5250

J **Wheelplate Square**

ART. CODE	↔	↗	↕	MATCHING PLANTER
6ECOAP020	26	26	5	6ECOK4176

Sleek in design, endlessly versatile and truly timeless.

basic series

Timeless collection

The Timeless collection looks great anytime and everywhere. Thanks to the sleek design, the planters suit any type of interior. Moreover, they are available in any RAL colour*, so that you can combine them perfectly with other colours in the interior. The Timeless collection is available with several handy accessories that make it easier to assemble the planters.

*With the exception of the mother-of-pearl and fluor colours.

Photo: Timeless Largo Regular Rectangle

basic series

Timeless collection

Largo Regular

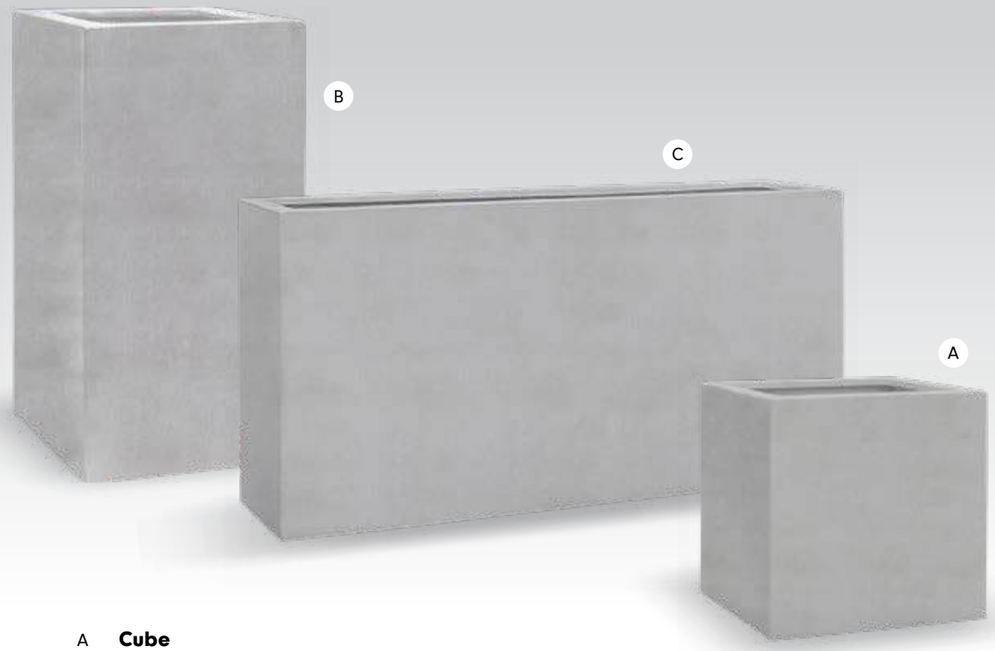

A **Cube**

ART. CODE	↔	↗		WHEELPLATE
6TIMC2121	21	21	21	
6TIMC4040	40	40	40	6TIMAL005
6TIMC5050	50	50	50	6TIMAL006

B **Square**

ART. CODE	↔	↗		WHEELPLATE	INSERT PLATE
6TIMS4022	40	40	22		
6TIMS4075	40	40	75	6TIMAL005	6TIMAL001
6TIMS4010	40	40	100	6TIMAL005	6TIMAL001

C **Rectangle**

ART. CODE	↔	↗		WHEELPLATE	LINER	INSERT PLATE
6TIMR6018	60	20	18			
6TIMR8022	80	40	22	6TIMAL007		
6TIMR1022	100	40	22			
6TIMR8040	80	40	40	6TIMAL007	6TIMAL014	
6TIMR1240	120	40	40	6TIMAL008	6TIMAL013	
6TIMR8075	80	40	75	6TIMAL007	6TIMAL014	6TIMAL002
6TIMR1275	120	40	75	6TIMAL008	6TIMAL013	6TIMAL003
6TIMR1575	150	40	75	6TIMAL009		2x 6TIMAL004

Photo: Timeless Largo Wheelplate Rectangle

basic series

Timeless collection

Largo Accessories

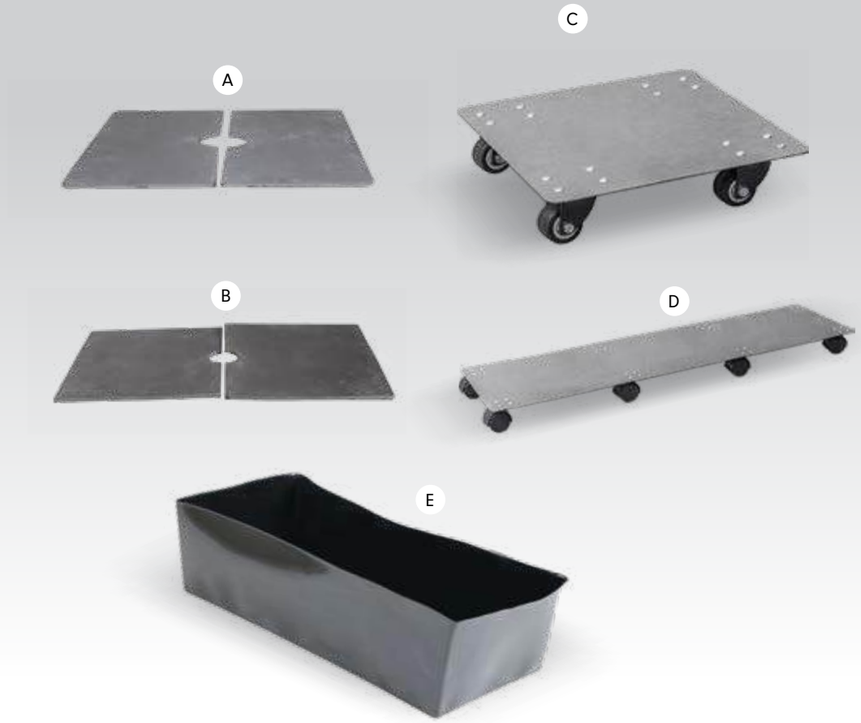

A **Insert Plate (2 Parts) Square**

ART. CODE	↔	⟋		MATCHING PLANTER	
6TIMAL001	39	20	1	6TIMS4075	6TIMS4010

B **Insert Plate (2 Parts) Rectangle**

ART. CODE	↔	⟋		MATCHING PLANTER
6TIMAL002	39	37	1	6TIMR8075
6TIMAL003	59	37	1	6TIMR1275
6TIMAL004	73,5	37	1	6TIMR1575

C **Wheelplate Square**

ART. CODE	↔	⟋		MATCHING PLANTER		
6TIMAL005	28	28	6	6TIMS4010	6TIMC4040	6TIMS4075
6TIMAL006	37	37	7	6TIMC5050		

D **Wheelplate Rectangle**

ART. CODE	↔	⟋		MATCHING PLANTER		
6TIMAL007	67	27	7	6TIMR8075	6TIMR8040	6TIMR8022
6TIMAL008	107	27	7	6TIMR1275	6TIMR1240	
6TIMAL009	137	27	7	6TIMR1575		

E **Liner Rectangle**

ART. CODE	↔	⟋		MATCHING PLANTER	
6TIMAL014	80	40	40	6TIMR8075	6TIMR8040
6TIMAL013	120	40	40	6TIMR1275	6TIMR1240

Photo: Timeless Sphere Regular Globe

basic series

Timeless collection

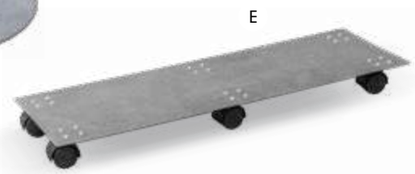

Sphere Regular

A **Globe**

ART. CODE	⌀	⌀	↕
6TIMG5748	30	57	48
6TIMG7865	40	78	65

Cono Regular

B **Partner Straight**

ART. CODE	⌀	⌀	↕	INSERT PLATE
6TIMP4375	33	43	75	6TIMAC001

Cono Accessories

D **Insert Plate Hydro Round**

ART. CODE	⌀	↕	MATCHING PLANTER
6TIMAC001	39	1	6TIMP4375

Solo Regular

C **Rectangle**

ART. CODE	↔	⟋	↕	WHEELPLATE
6TIMR8043	80	30	43	6TIMAS001

Solo Accessories

Wheelplate Rectangle

ART. CODE	↔	⟋	↕	MATCHING PLANTER
6TIMAS001	68	22	6	6TIMR8043

Photo: Timeless Ovation Regular Vulcan

basic series

Timeless collection

Ovation Regular

A **Oval**

ART. CODE	↔	⟋	
6TIMO3417	34	22	17
6TIMO5025	50	32	25

B **Pure Vase**

ART. CODE	↔	⟋		INSERT PLATE
6TIME5094	50	32	94	6TIMAO001

C **Vulcan**

ART. CODE	↔	⟋	
6TIMV6550	65	56	50
6TIMV9775	98	84	75
6TIMV1185	110	95	85

Ovation Accessories

D **Insert Plate Oval**

ART. CODE	↔	⟋		MATCHING PLANTER
6TIMAO001	47	29	1	6TIME5094

basic series

Ecoline and **Timeless** collection

Sprayed in all colours and special finishes

The Baq Ecoline and Timeless collections can be spray-painted in a wide range of RAL and Baq colours or in special spray techniques such as Metallic, Sand, and Craquelure. This allows you to ensure that every planter seamlessly matches the desired atmosphere and interior.

Standard

All RAL colours Matt/Glossy
Cham Matt
Charcoal Glossy
Taupe Matt/Glossy

Standard RAL 9010

Sand

All RAL colours Matt

Sand RAL 9001

Gold

Satin gold Matt/Glossy

Gold Satin gold

Oxidation

Patina Matt
Rust Matt

Oxidation Rust

Leatherlook

All RAL colours Matt/Glossy
Ice blue Matt/Glossy
Bronze Matt/Glossy
Dark chocolate Matt/Glossy
Copper Matt/Glossy
Light gold Matt/Glossy
Honey Matt/Glossy
Gold Matt/Glossy
Champagne Matt/Glossy
Silver Matt/Glossy
Titanium Matt/Glossy
Truffle Matt/Glossy
Sage Matt/Glossy

Leatherlook Sage

Metallic

Ice blue Matt/Glossy
Bronze Matt/Glossy
Dark chocolate Matt/Glossy
Copper Matt/Glossy
Light gold Matt/Glossy
Honey Matt/Glossy
Gold Matt/Glossy
Champagne Matt/Glossy
Silver Matt/Glossy
Titanium Matt/Glossy
Truffle Matt/Glossy
Sage Matt/Glossy

Metallic Bronze

Craquelure

RAL 1023 Traffic Yellow Matt/Glossy
RAL 3020 Traffic Red Matt/Glossy
RAL 5015 Sky Blue Matt/Glossy
RAL 6037 Pure Green Matt/Glossy
RAL 9005 Jet Black Matt/Glossy

Craquelure Sky Blue

premium series

The premium series elevates everyday greenery with refined materials and artisanal finishes. Each collection pairs modern design with sustainable craftsmanship, offering unique textures, hand-finished surfaces, and a palette of sophisticated colours. These planters are thoughtfully created for those who seek a luxurious look at a considered price, balancing beauty, durability, and function.

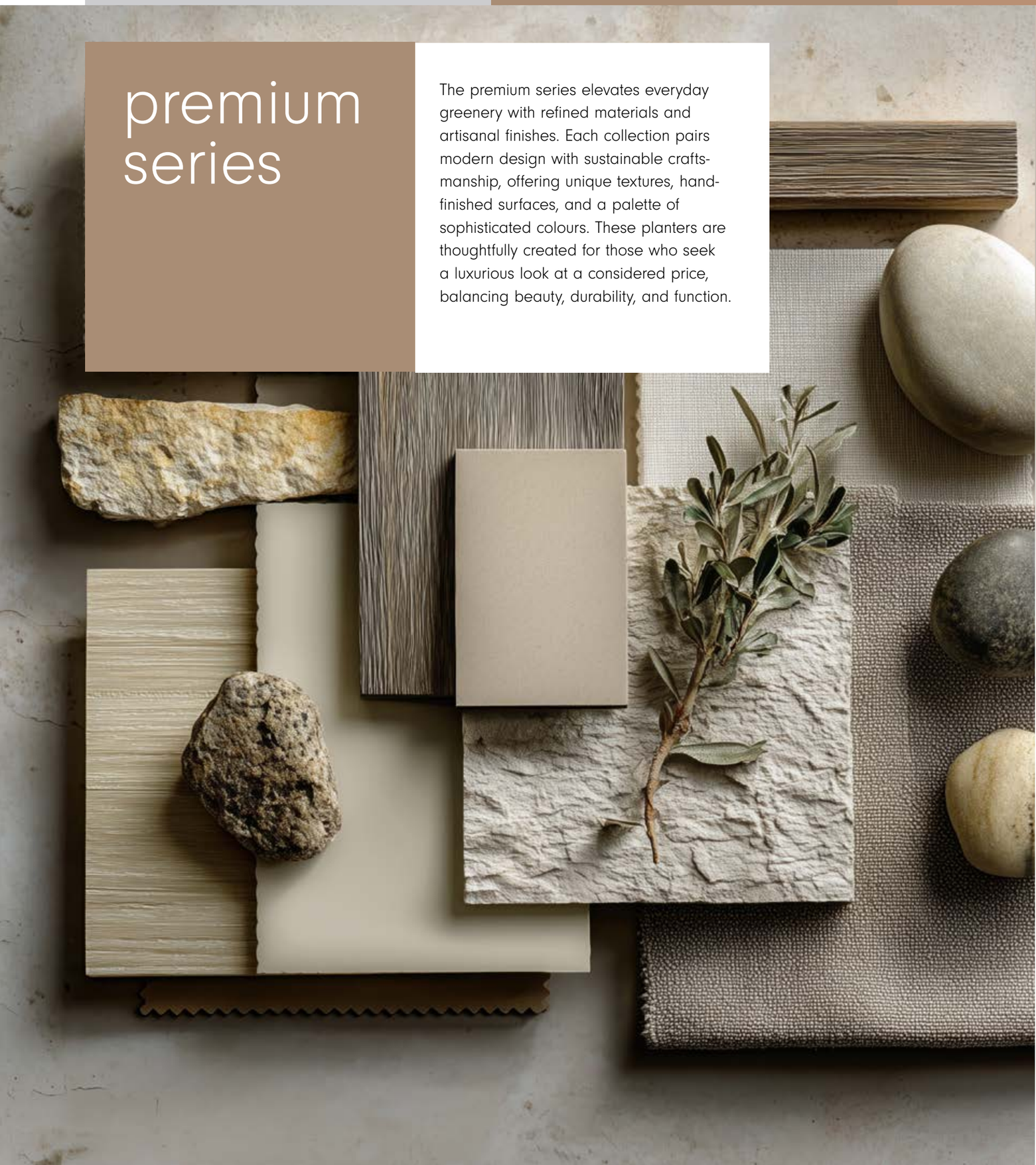

Algar

Atlas

Dune

Naturescast®

Nucast®

Opus

Polystone

Raindrop

Seren

Terrazzo

Tornado

Tortuga

Vertical Rib

Rugged as stone, with powerful textures inspired by nature.

premium series

Algar collection

With the coarse surface structure, the planters from the Baq Algar collection have a robust appearance reminiscent of rock formations and natural stone. This makes each planter unique. Baq Algar is available in three special colours. The planters feature a drainage hole and are both frost- and UV-resistant. This makes this collection suitable for outdoor and indoor use. For indoor use, we recommend using a liner to make the planter waterproof.

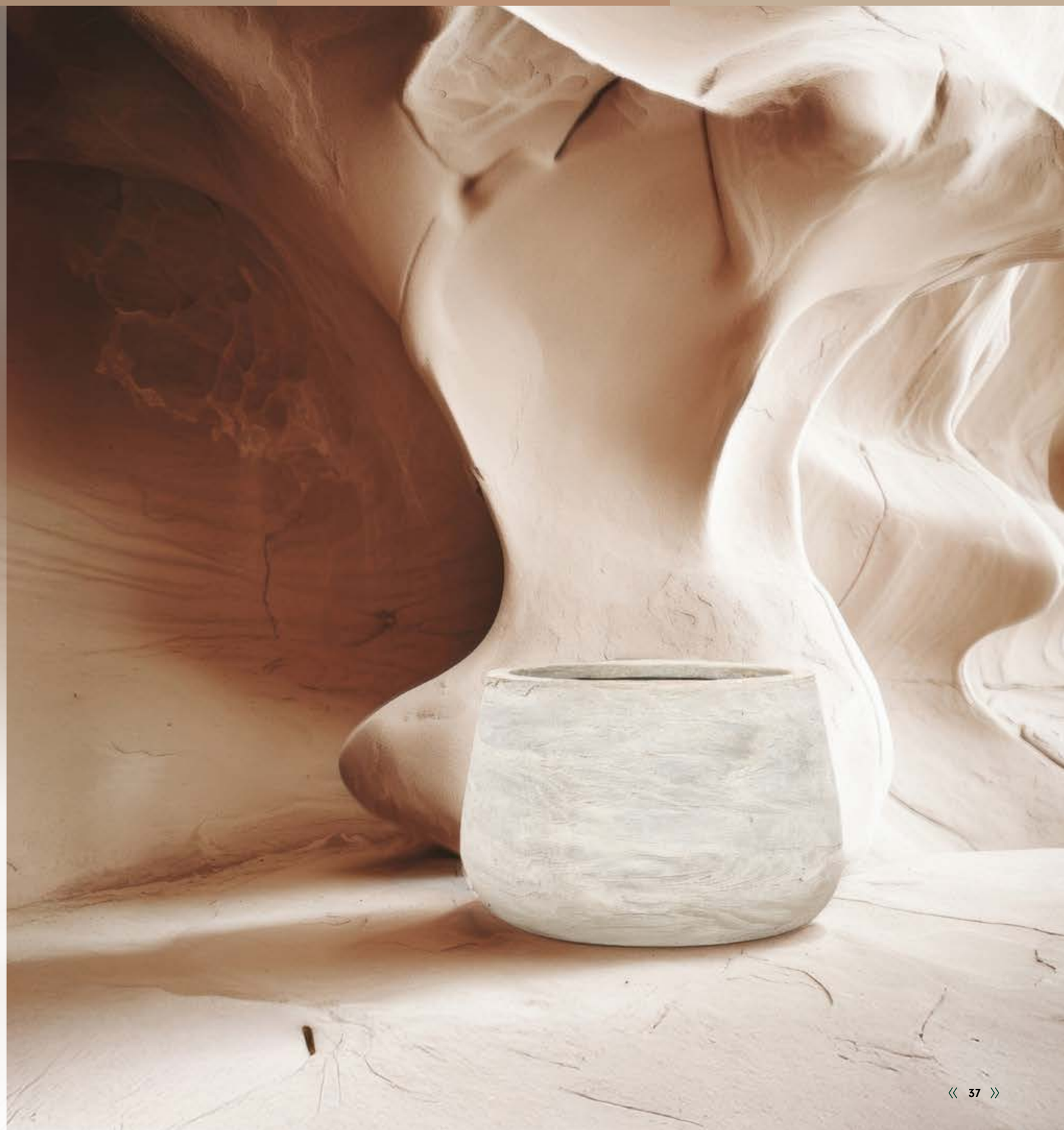

Photo: Algar Balloon White

premium series

Algar collection

A **Balloon White**

ART. CODE			
6AGRBCL14	20	30	36
6AGRBCL15	31	45	54
6AGRBCL16	47	65	75

B **Couple White**

ART. CODE			
6AGRCCL11	29	34	34
6AGRCCL12	38	44	44
6AGRCCL13	46	54	54

C **Darcy Low White**

ART. CODE			
6AGRDCL17	27	37	24
6AGRDCL18	36	51	34
6AGRDCL19	53	70	46

D **Darcy White**

ART. CODE			
6AGRWDH12	27	34	29
6AGRWDH11	36	44	36
6AGRWDH10	46	55	43

E **Partner White**

ART. CODE			
6AGRWPA55	39	45	58
6AGRWPA54	48	55	65
6AGRWPA53	56	64	73

F **Barrel White**

ART. CODE			
6AGRWBR78	34	41	33
6AGRWBR77	43	50	40
6AGRWBR76	52	60	48

Photo: Algar Partner Brown + Algar Barrel Brown

premium series

Algar collection

A **Balloon Brown**

ART. CODE			
6AGRBFB04	20	30	36
6AGRBFB05	31	45	54
6AGRBFB06	47	65	75

B **Couple Brown**

ART. CODE			
6AGRCFB01	29	34	34
6AGRCFB02	38	44	44
6AGRCFB03	46	54	54

C **Darcy Low Brown**

ART. CODE			
6AGRDFB07	27	37	24
6AGRDFB08	36	51	34
6AGRDFB09	53	70	46

D **Darcy Brown**

ART. CODE			
6AGRBDH32	27	34	29
6AGRBDH31	36	44	36
6AGRBDH30	46	55	43

E **Partner Brown**

ART. CODE			
6AGRBPA65	39	45	58
6AGRBPA64	48	55	65
6AGRBPA63	56	64	73

F **Barrel Brown**

ART. CODE			
6AGRBBR88	34	41	33
6AGRBBR87	43	50	40
6AGRBBR86	52	60	48

Photo: Algar Darcy Low Grey

premium series

Algar collection

A **Balloon Grey**

ART. CODE			
6AGRBSG91	20	30	36
6AGRBSG92	31	45	54
6AGRBSG93	47	65	75

B **Couple Grey**

ART. CODE			
6AGRCSG94	29	34	34
6AGRCSG95	38	44	44
6AGRCSG96	46	54	54

C **Darcy Low Grey**

ART. CODE			
6AGRDSG97	27	37	24
6AGRDSG98	36	51	34
6AGRDSG99	53	70	46

D **Darcy Grey**

ART. CODE			
6AGRGDH02	27	34	29
6AGRGDH01	36	44	36
6AGRGDH00	46	55	43

E **Partner Grey**

ART. CODE			
6AGRGPA25	39	45	58
6AGRGPA24	48	55	65
6AGRGPA23	56	64	73

F **Barrel Grey**

ART. CODE			
6AGRGBR48	34	41	33
6AGRGBR47	43	50	40
6AGRGBR46	52	60	48

Earthy textures and vibrant hues echo the spirit of the elements.

premium series

Atlas collection

The Atlas collection is characterised by a robust and distinctive surface texture reminiscent of coarse sand grains. Each planter has a unique colour with vibrant nuances. These planters are made of fiberstone and are suitable for both indoor and outdoor use. Thanks to their UV- and frost-resistance, they can remain outside all year round. The Baq Atlas planters are equipped with a drainage hole, so for indoor use, we recommend using a liner to make the planters watertight.

Photo: Atlas Darcy Brown

premium series

Atlas collection

A **Balloon Brown**

ART. CODE	⌀	⌀	↕
6ATLSBB06	36	45	35
6ATLSBB04	46	57	42
6ATLSBB02	58	72	53
6ATLSBB00	73	90	67

B **Bowl Brown**

ART. CODE	⌀	⌀	↕
6ATLSBB26	36	40	20
6ATLSBB24	41	50	25
6ATLSBB22	52	62	31
6ATLSBB20	63	75	37

C **Darcy Brown**

ART. CODE	⌀	⌀	↕
6ATLSDB46	27	34	29
6ATLSDB44	36	44	36
6ATLSDB42	45	55	43
6ATLSDB40	55	65	50

D **Darcy High Brown**

ART. CODE	⌀	⌀	↕
6ATLSDB66	20	27	29
6ATLSDB64	28	38	40
6ATLSDB62	39	53	56
6ATLSDB60	54	72	76

E **Rounded Rectangle Brown**

ART. CODE	↔	⟋	↕
6ATLSRB82	80	40	40
6ATLSRB80	100	50	50

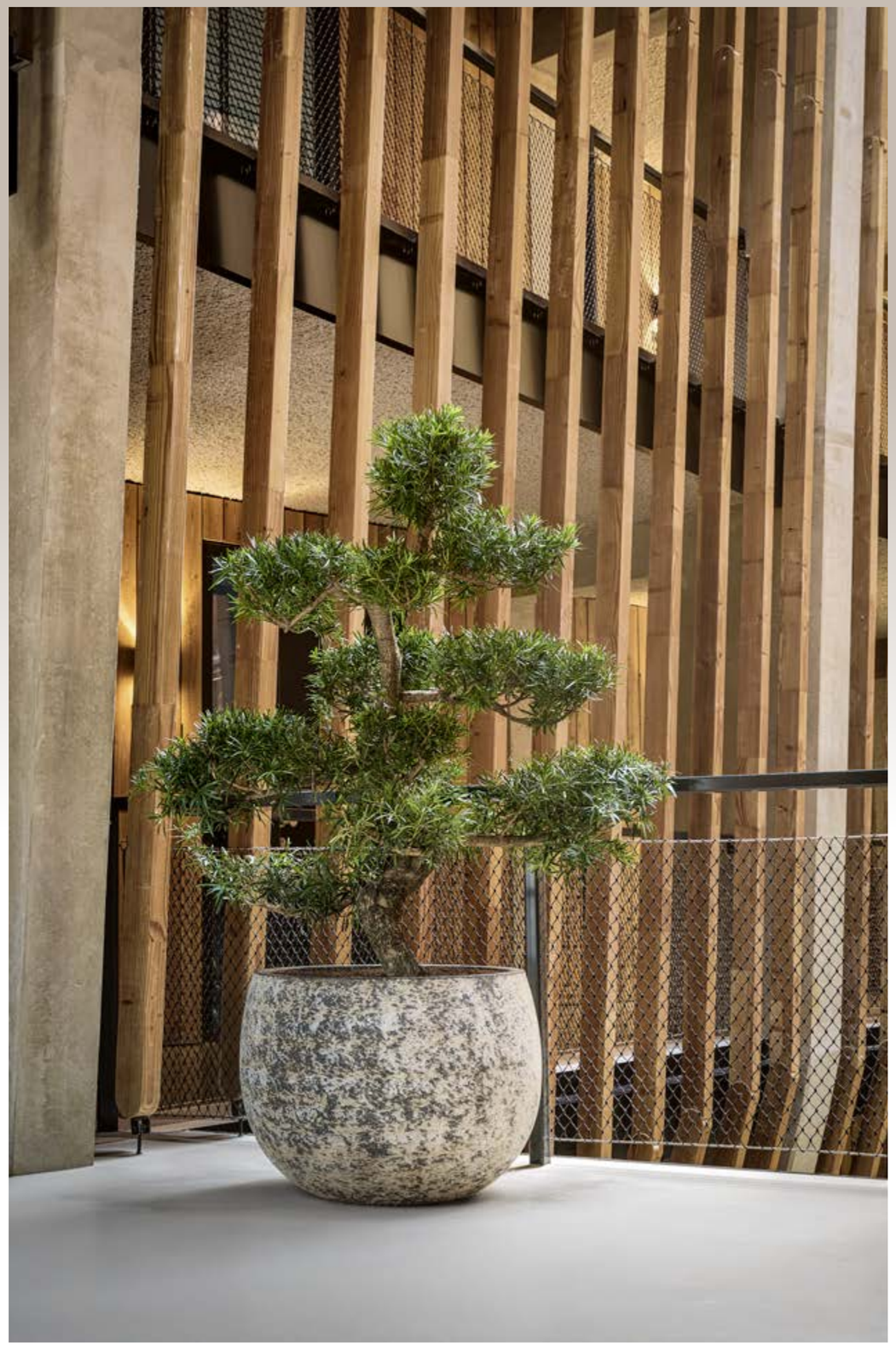

Photo: Atlas Balloon White

premium series

Atlas collection

A **Balloon White**

ART. CODE	⌀	⌀	↕
6ATLSBG16	36	45	35
6ATLSBG14	46	57	42
6ATLSBG12	58	72	53
6ATLSBG10	73	90	67

B **Bowl White**

ART. CODE	⌀	⌀	↕
6ATLSBG36	36	40	20
6ATLSBG34	41	50	25
6ATLSBG32	52	62	31
6ATLSBG30	63	75	37

C **Darcy White**

ART. CODE	⌀	⌀	↕
6ATLSDG56	27	34	29
6ATLSDG54	36	44	36
6ATLSDG52	45	55	43
6ATLSDG50	55	65	50

D **Darcy High White**

ART. CODE	⌀	⌀	↕
6ATLSDG76	20	27	29
6ATLSDG74	28	38	40
6ATLSDG72	39	53	56
6ATLSDG70	54	72	76

E **Rounded Rectangle White**

ART. CODE	↔	↗	↕
6ATLSRG92	80	40	40
6ATLSRG90	100	50	50

Dynamic lines like drifting dunes, a reflection of nature's movements.

premium series

Dune collection

The Dune collection has a beautiful surface texture reminiscent of the dynamic lines found in windblown sand dunes. Crafted from lightweight fibreclay, these planters are easy to move around. Thanks to their UV-resistant properties and drainage hole, they can be placed outdoors with ease. The Dune collection is fire retardant, making it a safe choice for indoor applications. For indoor use, a liner should be used.

Photo: Dune Cylinder Brown Beige + Dune Partner Brown Beige

premium series

Dune collection

A **Partner Brown Beige**

ART. CODE			
6DUNBR21A	18	25	40
6DUNBR21B	27	35	55
6DUNBR21C	37	48	75

B **Darcy Brown Beige**

ART. CODE			
6DUNBR60A	23	30	26
6DUNBR60B	33	41	37

C **Darcy Brown Beige**

ART. CODE			
6DUNBR61B	30	38	43
6DUNBR61C	39	49	55

D **Cylinder Brown Beige**

ART. CODE			
6DUNBR62B	32	38	37
6DUNBR62C	40	44	44
6DUNBR62D	48	53	52

E **Globe Brown Beige**

ART. CODE			
6DUNBB311	30	37	29
6DUNBB313	41	50	38

F **Emperor Brown Beige**

ART. CODE			
6DUNBB315	27	37	60
6DUNBB317	40	53	88

Photo: Dune Darcy Beige

premium series

Dune collection

A **Partner Beige**

ART. CODE			
6DUNBE21A	18	25	40
6DUNBE21B	27	35	55
6DUNBE21C	37	48	75

B **Darcy Beige**

ART. CODE			
6DUNBE60A	23	30	26
6DUNBE60B	33	41	37

C **Darcy Beige**

ART. CODE			
6DUNBE61B	30	38	43
6DUNBE61C	39	49	55

D **Cylinder Beige**

ART. CODE			
6DUNBE62B	32	38	37
6DUNBE62C	40	44	44
6DUNBE62D	48	53	52

E **Globe Beige**

ART. CODE			
6DUNBE202	30	37	29
6DUNBE204	41	50	38

F **Emperor Beige**

ART. CODE			
6DUNBE206	27	37	60
6DUNBE208	40	53	88

Photo: Dune Emperor Green + Dune Globe Green

premium series

Dune collection

A **Partner Green**

ART. CODE	⌀	⌀	↕
6DUNGR101	18	25	40
6DUNGR102	27	35	55
6DUNGR103	37	48	75

B **Darcy Green**

ART. CODE	⌀	⌀	↕
6DUNGR116	23	30	26
6DUNGR114	33	41	37

C **Darcy Green**

ART. CODE	⌀	⌀	↕
6DUNGR115	30	38	43
6DUNGR117	39	49	55

D **Cylinder Green**

ART. CODE	⌀	⌀	↕
6DUNGR128	32	38	37
6DUNGR129	40	44	44
6DUNGR130	48	53	52

E **Globe Green**

ART. CODE	⌀	⌀	↕
6DUNGR141	30	37	29
6DUNGR142	41	50	38

F **Emperor Green**

ART. CODE	⌀	⌀	↕
6DUNGR143	27	37	60
6DUNGR144	40	53	88

Crafted from forest debris, bringing the quiet poetry of nature indoors.

premium series

Naturescast® collection

The planters from the Naturescast® collection have a natural look and are made from rescued agro-forest debris such as dry leaves, twigs, and bark. These are bound together with a proprietary water-based binder, making the material eco-friendly, biodegradable, and recyclable. The material is also Cradle to Cradle® certified, ensuring it meets the highest standards for sustainable product design.

Photo: Naturescast® Cylinder Natural

premium series

Naturescast® collection

A **Couple Natural**

ART. CODE	⌀	⌀	↕
6NACNAC12	24	31	35
6NACNAC10	24	32	40
6NACNAC08	38	49	50

B **Couple Natural**

ART. CODE	⌀	⌀	↕
6NACNAC51	41	50	50
6NACNAC65	59	65	65

C **Partner Natural**

ART. CODE	⌀	⌀	↕
6NACNAP31	24	30	70
6NACNAP38	27	37	90

D **Cylinder Natural**

ART. CODE	⌀	⌀	↕
6NACNAC06	24	33	34
6NACNAC04	27	38	40
6NACNAC02	38	52	50

Recycled paper, sculped into new distinctive shapes.

premium series

Nucast® collection

The Nucast® planters are made from recycled paper composite, a very practical alternative to traditional materials such as stone and metal. Nucast® is a lightweight material that can be used to mimic most natural textures. It's also easy to recycle, making these planters an excellent sustainable choice.

Photo: Nucast® Couple Elephant Grey

premium series

Nucast® collection

A **Couple Elephant Grey**

ART. CODE	⌀	⌀	↕
6NUCCEG31	24	31	35
6NUCCEG32	24	32	40
6NUCCEG49	38	49	50

B **Couple Elephant Grey**

ART. CODE	⌀	⌀	↕
6NUCCEG50	41	50	50
6NUCCEG65	59	65	65

C **Partner Elephant Grey**

ART. CODE	⌀	⌀	↕
6NUCPEG30	24	30	70
6NUCPEG37	27	37	90

D **Cylinder Elephant Grey**

ART. CODE	⌀	⌀	↕
6NUCCEG33	24	33	34
6NUCCEG38	27	38	40
6NUCCEG52	38	52	50

**Luxurious shine,
rich texture,
bold character.**

premium series

Opus collection

The Opus collection is made of lightweight polystone with a special surface structure that resembles hammered metal. Thanks to a special finishing technique, the material of the planter can hardly be distinguished from real metal. Several models are equipped with a waterproof liner, for others we recommend using a Baq liner to make the planters watertight.

Photo: Opus Hammered Globe Silver + Opus Hammered Partner Silver

premium series

Opus collection

Hammered

A **Globe Gold**

ART. CODE	⌀	⌀	↕
6OPSC43HG	27	40	32
6OPSC64HG	41	60	43

B **Partner Gold**

ART. CODE	⌀	⌀	↕
6OPSP37HG	24	35	75
6OPSP39HG	24	35	97

C **Bowl Gold**

ART. CODE	⌀	⌀	↕
6OPSB10HG	30	45	27
6OPSB20HG	36	55	33

D **Darcy Gold**

ART. CODE	⌀	⌀	↕
6OPSD60HG	24	38	42
6OPSD70HG	30	45	48
6OPSD80HG	38	59	69

E **Darcy High Gold**

ART. CODE	⌀	⌀	↕
6OPSD90HG	32	46	100

F **Globe Silver**

ART. CODE	⌀	⌀	↕
6OPSC43HS	27	40	32
6OPSC64HS	41	60	43

G **Partner Silver**

ART. CODE	⌀	⌀	↕
6OPSP37HS	24	35	75
6OPSP39HS	24	35	97

H **Bowl Silver**

ART. CODE	⌀	⌀	↕
6OPSB15HS	30	45	27
6OPSB25HS	36	55	33

I **Darcy Silver**

ART. CODE	⌀	⌀	↕
6OPSD65HS	24	38	42
6OPSD75HS	30	45	48
6OPSD85HS	38	59	69

J **Darcy High Silver**

ART. CODE	⌀	⌀	↕
6OPSD90HS	32	46	100

Photo: Opus Hit Darcy High Silver

premium series

Opus collection

Hit

A **Globe Gold**

ART. CODE	⌀	⌀	↕
6OPSG40RG	27	40	32
6OPSG60RG	41	60	43

B **Partner Gold**

ART. CODE	⌀	⌀	↕
6OPSP75RG	24	35	75
6OPSP97RG	24	35	97

C **Bowl Gold**

ART. CODE	⌀	⌀	↕
6OPSB45RG	30	45	27
6OPSB55RG	36	55	33

D **Darcy Gold**

ART. CODE	⌀	⌀	↕
6OPSD38RG	24	38	42
6OPSD45RG	30	45	48
6OPSD59RG	38	59	69

E **Darcy High Gold**

ART. CODE	⌀	⌀	↕
6OPSD40RG	32	46	100

F **Globe Silver**

ART. CODE	⌀	⌀	↕
6OPSG35RS	27	40	32
6OPSG52RS	41	60	43

G **Partner Silver**

ART. CODE	⌀	⌀	↕
6OPSP70RS	24	35	75
6OPSP90RS	24	35	97

H **Bowl Silver**

ART. CODE	⌀	⌀	↕
6OPSB40RS	30	45	27
6OPSB50RS	36	55	33

I **Darcy Silver**

ART. CODE	⌀	⌀	↕
6OPSD38RS	24	38	42
6OPSD45RS	30	45	48
6OPSD59RS	38	59	69

J **Darcy High Silver**

ART. CODE	⌀	⌀	↕
6OPSD40RS	32	46	100

Photo: Opus Raw Couple Gold

premium series

Opus collection

Raw

A **Couple Gold**

ART. CODE	⌀	⌀	⊽
6OPSC33RG	23	38	30
6OPSC54RG	31	50	40
6OPSC65RG	41	65	53

B **Partner Gold**

ART. CODE	⌀	⌀	⊽
6OPSP36RG	24	31	65
6OPSP48RG	33	40	85
6OPSP51RG	41	50	105

C **Couple Silver**

ART. CODE	⌀	⌀	⊽
6OPSC33RS	23	38	30
6OPSC54RS	31	50	40
6OPSC65RS	41	65	53

D **Partner Silver**

ART. CODE	⌀	⌀	⊽
6OPSP36RS	24	31	65
6OPSP48RS	33	40	85
6OPSP51RS	41	50	105

Stone-like spirit, timeless strength, effortless grace.

premium series

Polystone collection

The planters in our Polystone collection get their authentic stone look from polystone, a handcrafted material composed of natural crushed limestone, dry-stamped into a mould to replicate the natural process of limestone formation. While this material is externally similar to natural stone, it's also surprisingly lightweight. A number of the models come with a liner, for the other models we recommend using a Baq liner to make the planter waterproof.

Photo: Polystone Plain Partner Natural

premium series

Polystone collection

Plain

A **Boat Natural**

ART. CODE	↔	⤢	
6POSPB010	46	20	13
6POSPB020	68	33	18

B **Partner Natural**

ART. CODE	⌀	⌀	
6POSPP003	24	30	70
6POSPP005	27	37	90
6POSPP001	39	50	120

C **Couple Natural**

ART. CODE	⌀	⌀	
6POSPO007	21	24	24
6POSPO011	30	40	40
6POSPO021	41	50	50
6POSPO030	58	65	65

D **Boat Grey**

ART. CODE	↔	⤢	
6POSRBL46	46	20	13
6POSRBL68	68	33	18

E **Partner Grey**

ART. CODE	⌀	⌀	
6POSRPL30	24	30	70
6POSRPL37	27	37	90
6POSRPL50	39	50	120

F **Couple Grey**

ART. CODE	⌀	⌀	
6POSPO009	21	24	24
6POSRCL40	30	40	40
6POSRCL50	41	50	50
6POSRCL65	58	65	65

G **Boat Smoke**

ART. CODE	↔	⤢	
6POSPBS10	46	20	13
6POSPBS20	68	33	18

H **Partner Smoke**

ART. CODE	⌀	⌀	
6POSPP016	24	30	70
6POSPP021	27	37	90
6POSPP031	39	50	120

I **Couple Smoke**

ART. CODE	⌀	⌀	
6POSPO070	21	24	24
6POSPO091	30	40	40
6POSPO101	41	50	50
6POSPO110	58	65	65

Photo: Polystone Plain Couple Rock

premium series

Polystone collection

Plain

A Boat Rock

ART. CODE	↔	↗	
6POSRB010	46	20	13
6POSRB020	68	33	18

B Partner Rock

ART. CODE	⌀	⌀	
6POSRPP31	24	30	70
6POSRPP38	27	37	90
6POSRPP51	39	50	120

C Couple Rock

ART. CODE	⌀	⌀	
6POSRCP24	21	24	24
6POSRCP41	30	40	40
6POSRCP51	41	50	50
6POSRCP65	58	65	65

Rough

D Partner Rock

ART. CODE	⌀	⌀	
6POSRP308	24	30	70
6POSRP310	27	37	90

E Couple Rock

ART. CODE	⌀	⌀	
6POSRC405	30	40	40
6POSRC506	41	50	50

Photo: Polystone Nathan James Partner White

premium series

Polystone collection

Nathan James

A **Balloon Pueter Champagne**

ART. CODE	⌀	⌀	↕
6POSYNB60	55	60	63
6POSYNB80	61	80	73

B **Partner Pueter Champagne**

ART. CODE	⌀	⌀	↕
6POSYNP38	27	37	90
6POSYNP47	39	46	110

C **Balloon Pueter White**

ART. CODE	⌀	⌀	↕
6POSYNJW3	55	60	63
6POSYNJW5	61	80	73

D **Partner White**

ART. CODE	⌀	⌀	↕
6POSYNN39	27	37	90
6POSYNN47	39	46	110

Texture that captures the dance of falling rain.

premium series

Raindrop collection

The Raindrop collection is characterised by the special texture to which it owes its name, as these planters always look like they've just been hit by a fresh rain shower. The Raindrop models are lightweight and made of fibreclay. All planters are frost and UV-resistant and are fire retardant, making them a safe choice for interior applications. The presence of a drainage hole in the bottom ensures that excess water can easily drain away. Use a Baq liner to make the planter waterproof.

Photo: Raindrop Cube Anthracite

premium series

Raindrop collection

A **Globe Anthracite**

ART. CODE			
6RDPAT143	31	42	30
6RDPAT144	44	55	40

B **Emperor Anthracite**

ART. CODE			
6RDPAT066	26	37	60
6RDPAT088	39	53	88

C **Bowl Anthracite**

ART. CODE			
6RDPAT123	42	44	19
6RDPAT124	45	55	26

D **Darcy Anthracite**

ART. CODE			
6RDPAT113	22	30	26
6RDPAT114	31	41	37
6RDPDAA02	58	62	55
6RDPDAA04	76	80	71

E **Darcy Anthracite**

ART. CODE			
6RDPAT302	16	24	20
6RDPAT304	26	37	29
6RDPAT306	40	54	42

F **Darcy High Anthracite**

ART. CODE			
6RDPAT117	28	37	42
6RDPAT118	38	55	55

G **Cylinder Anthracite**

ART. CODE			
6RDPAT133	29	34	32
6RDPAT134	37	42	41
6RDPAT135	46	51	49

H **Cylinder Anthracite**

ART. CODE			
6RDPAT514	18	24	26
6RDPAT516	27	36	39
6RDPAT518	38	48	52

I **Partner Anthracite**

ART. CODE			
6RDPAT062	28	32	62
6RDPAT079	38	42	79

J **Couple Anthracite**

ART. CODE			
6RDPAT127	32	37	33
6RDPAT128	39	44	43
6RDPAT129	49	54	51

K **Couple Anthracite**

ART. CODE			
6RDPAT726	16	22	22
6RDPAT728	24	32	32
6RDPAT730	35	44	44

L **Rectangle Anthracite**

ART. CODE			
6RDPAT153	70	23	23
6RDPAT154	80	30	30

M **Cube Anthracite**

ART. CODE			
6RDPAT250	30	30	27
6RDPAT251	40	40	36
6RDPAT252	50	50	45

Photo: Raindrop Couple Beige

premium series

Raindrop collection

A **Globe Beige**

ART. CODE			
6RDPBE243	31	42	30
6RDPBE244	44	55	40

B **Emperor Beige**

ART. CODE			
6RDPBE066	26	37	60
6RDPBE088	39	53	88

C **Bowl Beige**

ART. CODE			
6RDPBE223	42	44	19
6RDPBE224	45	55	26

D **Darcy Beige**

ART. CODE			
6RDPBE213	22	30	26
6RDPBE214	31	41	37
6RDPDAB55	58	62	55
6RDPDAB66	76	80	71

E **Darcy Beige**

ART. CODE			
6RDPBE408	16	24	20
6RDPBE410	26	37	29
6RDPBE412	40	54	42

F **Darcy High Beige**

ART. CODE			
6RDPBE217	28	37	42
6RDPBE218	38	55	55

G **Cylinder Beige**

ART. CODE			
6RDPBE233	29	34	32
6RDPBE234	37	42	41
6RDPBE235	46	51	49

H **Cylinder Beige**

ART. CODE			
6RDPBE620	18	24	26
6RDPBE622	27	36	39
6RDPBE624	38	48	52

I **Partner Beige**

ART. CODE			
6RDPBE062	28	32	62
6RDPBE079	38	42	79

J **Couple Beige**

ART. CODE			
6RDPBE227	32	37	33
6RDPBE228	39	44	43
6RDPBE229	49	54	51

K **Couple Beige**

ART. CODE			
6RDPBE832	16	22	22
6RDPBE834	24	32	32
6RDPBE836	35	44	44

L **Rectangle Beige**

ART. CODE			
6RDPBE253	70	23	23
6RDPBE254	80	30	30

M **Cube Beige**

ART. CODE			
6RDPBE247	30	30	27
6RDPBE248	40	40	36
6RDPBE249	50	50	45

Soft curves, defined by a serene presence.

premium series

Seren collection

The Seren collection is characterised by its distinctive rounded shapes, which create a harmonious appearance. The planters are crafted from polystone, a blend of plastic and ground limestone, that resembles natural stone while remaining surprisingly lightweight. As a result, the Seren collection is both practical and aesthetically refined.

Photo: Seren Bubble High Ashen

premium series

Seren collection

A **Baffle Ashen**

ART. CODE	↔	⟋	↕
6SRNBFA42	80	40	50
6SRNBFA44	100	40	50
6SRNBFA46	120	40	50

B **Bay Ashen**

ART. CODE	⌀	⌀	↕
6SRNBAA32	32	40	75
6SRNBAA34	40	48	90

C **Bond Ashen**

ART. CODE	⌀	⌀	↕
6SRNBOA22	31	35	35,5
6SRNBOA24	40	45	42
6SRNBOA26	49	55	51
6SRNBOA28	58	65	60

D **Bubble Ashen**

ART. CODE	⌀	⌀	↕
6SRNBUA02	22	30	31
6SRNBUA04	30	42	43
6SRNBUA06	42	55	56
6SRNBUA08	53	68	69

E **Bubble High Ashen**

ART. CODE	⌀	⌀	↕
6SRNBHA12	21	30	40
6SRNBHA14	31	42	55
6SRNBHA16	44	55	72
6SRNBHA18	53	68	89

F **Baffle Deep Mocha**

ART. CODE	↔	⟋	↕
6SRNBFM91	80	40	50
6SRNBFM93	100	40	50
6SRNBFM95	120	40	50

G **Bay Deep Mocha**

ART. CODE	⌀	⌀	↕
6SRNBAM81	32	40	75
6SRNBAM83	40	48	90

H **Bond Deep Mocha**

ART. CODE	⌀	⌀	↕
6SRNBOM71	31	35	35,5
6SRNBOM73	40	45	42
6SRNBOM75	49	55	51
6SRNBOM77	58	65	60

I **Bubble Deep Mocha**

ART. CODE	⌀	⌀	↕
6SRNBUM51	22	30	31
6SRNBUM53	30	42	43
6SRNBUM55	42	55	56
6SRNBUM57	53	68	69

J **Bubble High Deep Mocha**

ART. CODE	⌀	⌀	↕
6SRNBHM61	21	30	40
6SRNBHM63	31	42	55
6SRNBHM65	44	55	72
6SRNBHM67	53	68	89

Luxury and playfulness united in a refined terrazzo finish.

premium series

Terrazzo collection

The Terrazzo collection is characterised by a unique finish. The planters have a luxurious look due to the effect of crushed stone. Because the collection is made of fiberstone, the planters are lightweight but also very strong. The planters are UV- and frost-resistant and feature a drainage hole, making them suitable for outdoor use. When used indoors, we recommend using a Baq liner to make the planters waterproof.

Photo: Terrazzo Balloon Black

premium series

Terrazzo collection

A Cylinder Black

ART. CODE	⌀	⌀	↕
6TZZCB115	35	37	32
6TZZCB114	41	43	38
6TZZCB113	50	52	44

B Darcy Low Black

ART. CODE	⌀	⌀	↕
6TZZDB102	31	37	32
6TZZDB101	43	51	34
6TZZDB100	60	70	46

C Darcy Black

ART. CODE	⌀	⌀	↕
6TZZDB105	36	38	32
6TZZDB104	44	46	42
6TZZDB103	53	57	52

D Balloon Black

ART. CODE	⌀	⌀	↕
6TZZBB128	32	38	40
6TZZBB127	45	53	56
6TZZBB126	62	72	76

E Rounded Rectangle Black

ART. CODE	↔	⟋	↕
6TZZRRB02	80	40	40
6TZZRRB01	100	50	50

F Rounded Cube Black

ART. CODE	↔	⟋	↕
6TZZCRB24	45	45	46
6TZZCRB23	55	55	56

Photo: Terrazzo Cylinder Mocha

premium series

Terrazzo collection

A **Cylinder Mocha**

ART. CODE	⌀	⌀	↕
6TZZCM125	35	37	32
6TZZCM124	41	43	38
6TZZCM123	50	52	44

B **Darcy Low Mocha**

ART. CODE	⌀	⌀	↕
6TZZDM112	31	37	32
6TZZDM111	43	51	34
6TZZDM110	60	70	46

C **Darcy Mocha**

ART. CODE	⌀	⌀	↕
6TZZDM115	36	38	32
6TZZDM114	44	46	42
6TZZDM113	53	57	52

D **Balloon Mocha**

ART. CODE	⌀	⌀	↕
6TZZBM138	32	38	40
6TZZBM137	45	53	56
6TZZBM136	62	72	76

E **Rounded Rectangle Mocha**

ART. CODE	↔	↗	↕
6TZZRRM22	80	40	40
6TZZRRM21	100	50	50

F **Rounded Cube Mocha**

ART. CODE	↔	↗	↕
6TZZCRB34	45	45	46
6TZZCRM33	55	55	56

A celebration of powerful movement and dynamic energy.

premium series

Tornado collection

The planters from the Tornado collection are characterised by a special surface structure with wavy lines. This collection therefore exudes dynamism. The planters are made of fibreclay and are UV-resistant. In addition, they are provided with a drainage hole, allowing them to be placed both indoors and outdoors. Because of its fire retardant properties, the collection is safe to use indoors. When placing the planters indoors, we recommend using a liner.

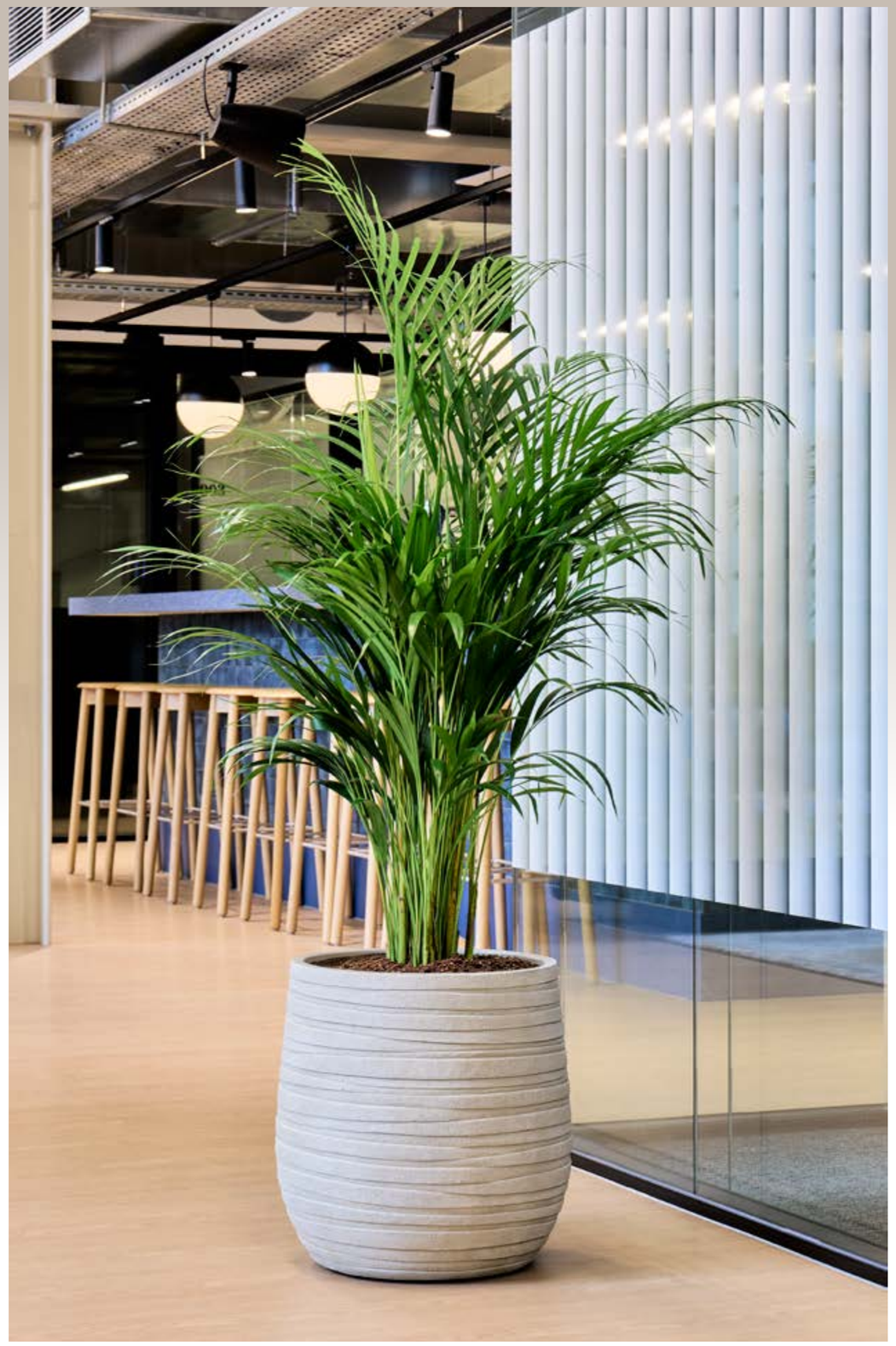

Photo: Tornado Darcy Beige

premium series

Tornado collection

A **Couple Beige**

ART. CODE			
6TORCB111	31	36	32
6TORCB112	40	46	39

B **Darcy Beige**

ART. CODE			
6TORDB117	28	32	32
6TORDB118	40	44	44

C **Emperor Beige**

ART. CODE			
6TOREB113	27	36	45
6TOREB114	36	49	61

D **Partner Beige**

ART. CODE			
6TORPB115	33	37	61
6TORPB116	44	49	80

Photo: Tornado Partner Green

premium series

Tornado collection

A **Couple Green**

ART. CODE	⌀	⌀	↕
6TORCG001	31	36	32
6TORCG002	40	46	39

B **Darcy Green**

ART. CODE	⌀	⌀	↕
6TORDG007	28	32	32
6TORDG008	40	44	44

C **Emperor Green**

ART. CODE	⌀	⌀	↕
6TOREG003	27	36	45
6TOREG004	36	49	61

D **Partner Green**

ART. CODE	⌀	⌀	↕
6TORPG005	33	37	61
6TORPG006	44	49	80

Bold, unique and full of character, like the turtle's shell.

premium series

Tortuga collection

The Baq Tortuga collection has a rugged and contemporary look that fits modern interiors and outdoor spaces. The planters have a unique, angular pattern and are real eye-catchers. Moreover, the planters are fire retardant, UV- and frost-resistant, and are equipped with a drainage hole.

Photo: Tortuga Darcy Forest Green

premium series

Tortuga collection

A **Couple Forest Green**

ART. CODE	⌀	⌀	↕
6TRTCFG01	31	40	31
6TRTCFG03	41	51	40

B **Darcy Forest Green**

ART. CODE	⌀	⌀	↕
6TRTFGD09	30	40	28
6TRTFGD11	42	54	39

C **Globe Forest Green**

ART. CODE	⌀	⌀	↕
6TRTFGG13	32	42	22
6TRTFGG15	43	54	27

D **Partner Forest Green**

ART. CODE	⌀	⌀	↕
6TRTFGP05	27	31	61
6TRTFGP07	36	41	77

Photo: Tortuga Couple Chocolate Brown + Tortuga Partner Chocolate Brown

premium series

Tortuga collection

A **Couple Chocolate Brown**

ART. CODE			
6TRTCCB02	31	40	31
6TRTCCB04	41	51	40

B **Darcy Chocolate Brown**

ART. CODE			
6TRTCBD10	30	40	28
6TRTCBD12	42	54	39

C **Globe Chocolate Brown**

ART. CODE			
6TRTCBG14	32	42	22
6TRTCBG16	43	54	27

D **Partner Chocolate Brown**

ART. CODE			
6TRTCBP06	27	31	61
6TRTCBP08	36	41	77

Bold vertical lines create a symphony of rhythm and shadow.

premium series

Vertical Rib collection

The Vertical Rib has a beautiful ribbed surface with a wide edge. The planters are made from fibreclay, which has the same appearance as cement but is much lighter and therefore easier to move around. The Vertical Rib collection is UV-resistant, so you can place the planter indoors (with a liner) or outside. As the planters are fire retardant, the collection is a safe choice for indoor applications.

Photo: Vertical Rib Cylinder Beige

premium series

Vertical Rib collection

A **Cylinder Anthracite**

ART. CODE	⌀	⌀	↕
6VRCA0024	19	23	24
6VRCA0030	26	30	31
6VRCA0040	36	40	40

B **Cylinder Anthracite**

ART. CODE	⌀	⌀	↕
6VRCA0047	26	30	47
6VRCA0057	33	37	57
6VRCA0065	41	45	65

C **Cylinder Beige**

ART. CODE	⌀	⌀	↕
6VRCB0024	19	23	24
6VRCB0030	26	30	31
6VRCB0040	36	40	40

D **Cylinder Beige**

ART. CODE	⌀	⌀	↕
6VRCB0047	26	30	47
6VRCB0057	33	37	57
6VRCB0065	41	45	65

E **Cylinder Green**

ART. CODE	⌀	⌀	↕
6VRCG0024	19	23	24
6VRCG0030	26	30	31
6VRCG0040	36	40	40

F **Cylinder Green**

ART. CODE	⌀	⌀	↕
6VRCG0047	26	30	47
6VRCG0057	33	37	57
6VRCG0065	41	45	65

luxe series

The luxe series is defined by its use of exceptional materials and meticulous craftsmanship. Each planter features refined finishes, such as premium ceramics, natural textures, or artisanal coatings, that lend a sense of understated luxury. Carefully made for discerning interiors and projects, these planters stand out through quality and elegant detailing. The luxe series brings modern sophistication and a tactile richness to every space.

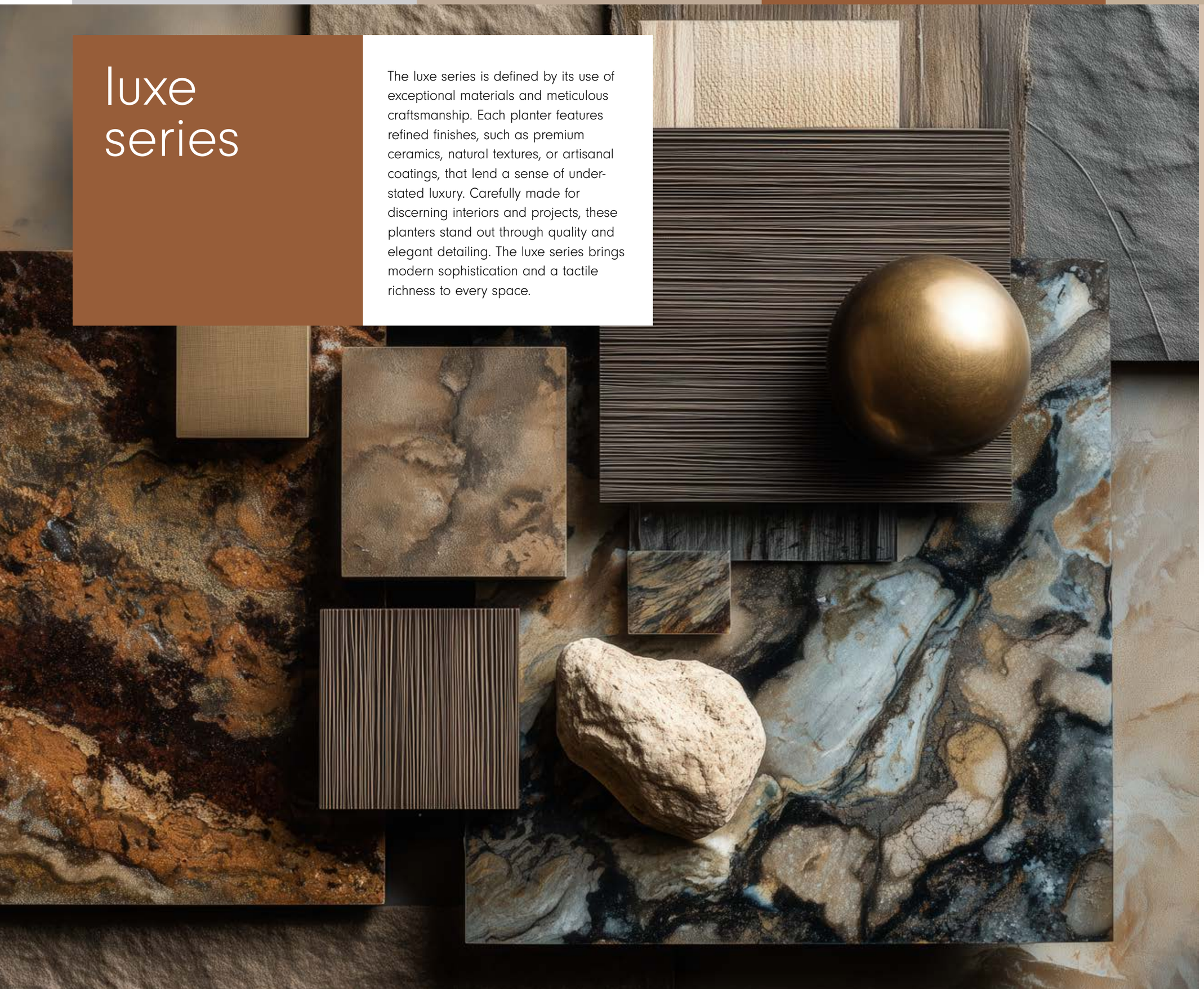

Gradient

Lava

Metallic

Polystone Coated

Sandora

Subtle colour gradients and timeless shapes evoke harmony and calm.

luxe series

Gradient collection

The Gradient planters feature a subtle, hand-sprayed colour gradient that creates a harmonious look. The models in this collection are made of polyresin, a solid material consisting of a mixture of ground stone and liquid synthetic resin. Several models feature a liner and are therefore waterproof.

Photo: Gradient Couple Matt Coffee

luxe series

Gradient collection

A **Balloon Matt Coffee**

ART. CODE	⌀	⌀	↕
6GRDB54CB	44	54	51
6GRDB70CB	57	70	68

B **Couple Matt Coffee**

ART. CODE	⌀	⌀	↕
6GRDC70CB	58	70	56
6GRDC90CB	76	90	70

C **Partner Matt Coffee**

ART. CODE	⌀	⌀	↕
6GRDP47CB	36	40	75
6GRDP49CB	36	40	95

D **Cylinder Matt Coffee**

ART. CODE	⌀	⌀	↕
6GRDC42CB	33	40	40
6GRDC48CB	33	40	60
6GRDC54CB	33	40	80
6GRDC60CB	33	40	100

E **Hanging Bowl Matt Coffee**

ART. CODE	⌀	⌀	↕
6GRDH33CB	23	33	21
6GRDH38CB	28	38	24
6GRDH45CB	34	45	28

F **Hanging Basket Matt Coffee**

ART. CODE	⌀	⌀	↕
6GRDH21CB	19	21	21

G **Hanging Globe Matt Coffee**

ART. CODE	⌀	⌀	↕
6GRDH24CB	22	24	19

Accessories

H **Chain Extension**

ART. CODE	↔
6DHMHCE02	100

Photo: Gradient Balloon Matt Honey

luxe series

Gradient collection

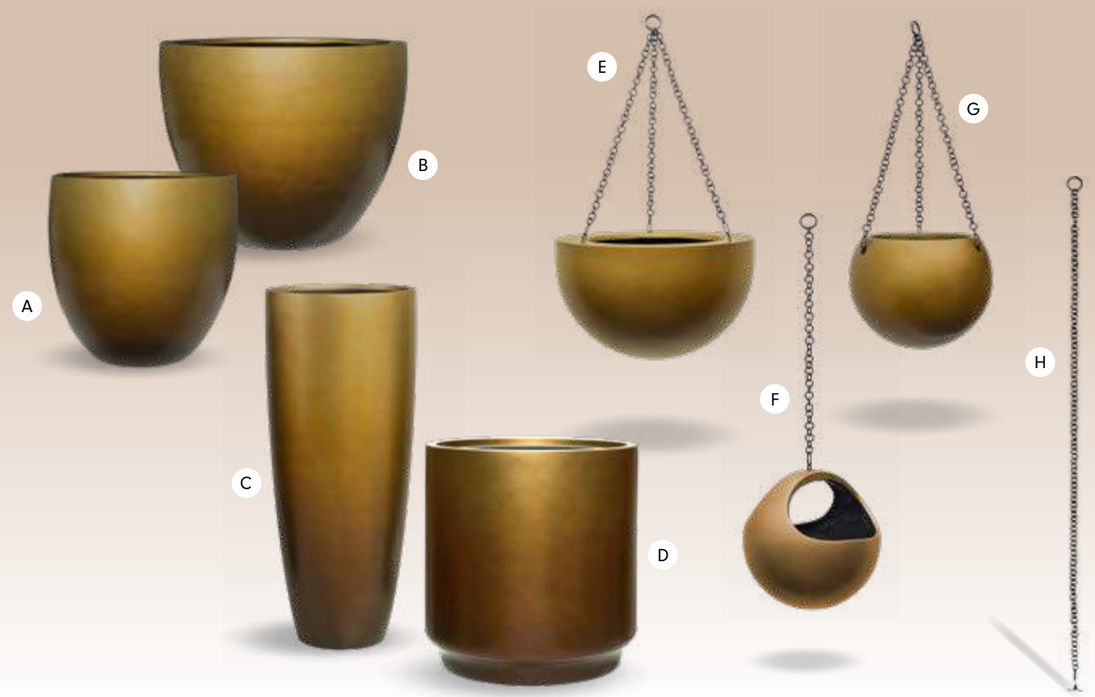

A **Balloon Matt Honey**

ART. CODE	⌀	⌀	↕
6GRDB54HB	44	54	51
6GRDB70HB	57	70	68

B **Couple Matt Honey**

ART. CODE	⌀	⌀	↕
6GRDC70HB	58	70	56
6GRDC90HB	76	90	70

C **Partner Matt Honey**

ART. CODE	⌀	⌀	↕
6GRDP47HB	36	40	75
6GRDP49HB	36	40	95

D **Cylinder Matt Honey**

ART. CODE	⌀	⌀	↕
6GRDC44HB	33	40	40
6GRDC50HB	33	40	60
6GRDC56HB	33	40	80
6GRDC62HB	33	40	100

E **Hanging Bowl Matt Honey**

ART. CODE	⌀	⌀	↕
6GRDH33HB	23	33	21
6GRDH38HB	28	38	24
6GRDH45HB	34	45	28

F **Hanging Basket Matt Honey**

ART. CODE	⌀	⌀	↕
6GRDH21HB	19	21	21

G **Hanging Globe Matt Honey**

ART. CODE	⌀	⌀	↕
6GRDH24HB	22	24	19

Accessories

H **Chain Extension**

ART. CODE	↔
6DHMHCE02	100

Photo: Gradient Balloon Matt Forest Green

luxe series

Gradient collection

A **Balloon Matt Forest Green**

ART. CODE	⌀	⌀	↕
6GRDB54OG	44	54	51
6GRDB70OG	57	70	68

B **Couple Matt Forest Green**

ART. CODE	⌀	⌀	↕
6GRDC70OG	58	70	56
6GRDC90OG	76	90	70

C **Partner Matt Forest Green**

ART. CODE	⌀	⌀	↕
6GRDP47OG	36	40	75
6GRDP49OG	36	40	95

D **Cylinder Matt Forest Green**

ART. CODE	⌀	⌀	↕
6GRDC46OG	33	40	40
6GRDC52OG	33	40	60
6GRDC58OG	33	40	80
6GRDC64OG	33	40	100

E **Hanging Bowl Matt Forest Green**

ART. CODE	⌀	⌀	↕
6GRDH33OG	23	33	21
6GRDH38OG	28	38	24
6GRDH45OG	34	45	28

F **Hanging Basket Matt Forest Green**

ART. CODE	⌀	⌀	↕
6GRDH21OG	19	21	21

G **Hanging Globe Matt Forest Green**

ART. CODE	⌀	⌀	↕
6GRDH24OG	22	24	19

Accessories

H **Chain Extension**

ART. CODE	↔
6DHMHCE02	100

Photo: Gradient Elevated Cylinder Low Matt Honey

luxe series

Gradient collection

Elevated

A **Cylinder High Matt Coffee**

ART. CODE	⌀	⌀	↕
6GRDC20CB	33	40	62
6GRDC00CB	42	50	76

B **Cylinder Low Matt Coffee**

ART. CODE	⌀	⌀	↕
6GRDC30CB	33	40	43
6GRDC10CB	42	50	53

C **Rectangle High Matt Coffee**

ART. CODE	↔	↗	↕
6GRDR80CB	82	34	69

D **Rectangle Low Matt Coffee**

ART. CODE	↔	↗	↕
6GRDR90CB	82	34	51

E **Cylinder High Matt Honey**

ART. CODE	⌀	⌀	↕
6GRDC22HB	33	40	62
6GRDC02HB	42	50	76

F **Cylinder Low Matt Honey**

ART. CODE	⌀	⌀	↕
6GRDC40HB	33	40	43
6GRDC12HB	42	50	53

G **Rectangle High Matt Honey**

ART. CODE	↔	↗	↕
6GRDR60HB	82	34	69

H **Rectangle Low Matt Honey**

ART. CODE	↔	↗	↕
6GRDR92HB	82	34	51

Raw, artisanal and unique – each piece forged by fire.

luxe series

Lava collection

The Lava collection is distinctive because of its remarkable surface, which is created by a special technique that we call 'scratch off'. These ceramic planters are made in the traditional way using wood fired ovens, which makes each product unique. The planters have a drainage hole and are therefore suitable for outdoor use. For indoor use, we recommend a liner to make the planter waterproof. Due to the use of natural materials, the colours shown may differ from reality.

Photo: Lava Balloon Relic Jade

luxe series

Lava collection

A **Emperor Relic Jade**

ART. CODE	⌀	⌀	↕
6LAVE750J	31	45	75

B **Balloon Relic Jade**

ART. CODE	⌀	⌀	↕
6LAVG430J	32	49	43
6LAVG500J	37	54	50
6LAVG550J	42	60	55

C **Balloon Relic Jade**

ART. CODE	⌀	⌀	↕
6LAVG730J	46	73	80
6LAVG850J	55	85	80

D **Coppa Relic Jade**

ART. CODE	⌀	⌀	↕
6LAVR680J	36	50	68

E **Couple Relic Jade**

ART. CODE	⌀	⌀	↕
6LAVC340J	30	36	34
6LAVC420J	36	45	42
6LAVC480J	48	55	48

F **Bowl Relic Jade**

ART. CODE	⌀	⌀	↕
6LAVB240J	33	40	24
6LAVB290J	44	52	29

G **Partner Straight Relic Jade**

ART. CODE	⌀	⌀	↕
6LAVP650J	29	35	65
6LAVP850J	40	46	85

H **Partner Relic Jade**

ART. CODE	⌀	⌀	↕
6LAVP105J	49	55	105

Photo: Lava Coppa Relic Black

luxe series

Lava collection

A **Emperor Relic Black**

ART. CODE			
6LAVE750Z	31	45	75
6LAVE950Z	39	57	95

B **Balloon Relic Black**

ART. CODE			
6LAVG430Z	32	49	43
6LAVG500Z	37	54	50
6LAVG550Z	42	60	55

C **Balloon Relic Black**

ART. CODE			
6LAVG730B	46	73	80
6LAVG850B	55	85	80

D **Coppa Relic Black**

ART. CODE			
6LAVR680Z	36	50	68

E **Couple Relic Black**

ART. CODE			
6LAVC340Z	30	36	34
6LAVC420Z	38	45	42
6LAVC480Z	48	55	48

F **Bowl Relic Black**

ART. CODE			
6LAVB240Z	33	40	24
6LAVB290Z	44	52	29

G **Partner Straight Relic Black**

ART. CODE			
6LAVP650Z	29	35	65
6LAVP850Z	40	46	85

H **Partner Relic Black**

ART. CODE			
6LAVP105Z	49	55	105

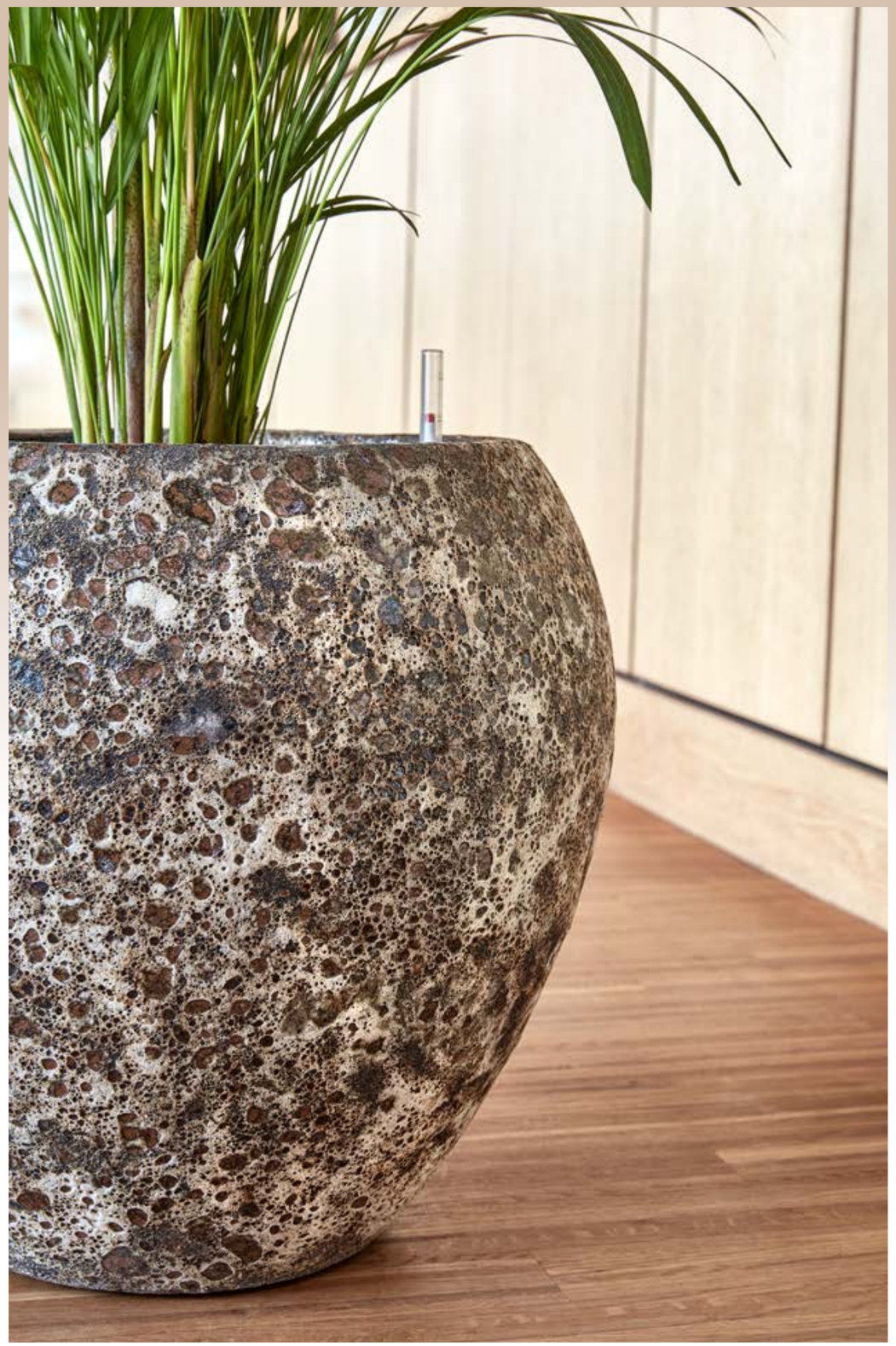

Photo: Lava Balloon Relic Rust Metal

luxe series

Lava collection

A **Emperor Relic Rust Metal**

ART. CODE			
6LAVE750M	31	45	75
6LAVE950M	39	57	95

B **Balloon Relic Rust Metal**

ART. CODE			
6LAVG430M	32	49	43
6LAVG500M	37	54	50
6LAVG550M	42	60	55

C **Coppa Relic Rust Metal**

ART. CODE			
6LAVR680M	36	50	68

D **Couple Relic Rust Metal**

ART. CODE			
6LAVC340M	30	36	34
6LAVC420M	38	45	42
6LAVC480M	48	55	48

E **Bowl Relic Rust Metal**

ART. CODE			
6LAVB240M	33	40	24
6LAVB290M	44	52	29

F **Partner Straight Relic Rust Metal**

ART. CODE			
6LAVP650M	29	35	65
6LAVP850M	40	46	85

G **Partner Relic Rust Metal**

ART. CODE			
6LAVP105M	49	55	105

Where silver shimmers, elegance finds its shine.

luxe series

Metallic collection

The Metallic collection has an elegant and refined look. These handmade planters are completely covered with silver leaf and finished with a layer of lacquer. Several models come with a matching waterproof liner.

Photo: Metallic Silver leaf Partner Matt Coffee

luxe series

Metallic collection

Silver leaf

A **Boat Matt Coffee**

ART. CODE	↔	⟋	↕
6MTLB56CB	56	23	20
6MTLB75CB	75	30	25

B **Bowl Matt Coffee**

ART. CODE	⌀	⌀	↕
6MTLC45CB	35	45	27

C **Bowl Ufo Matt Coffee**

ART. CODE	⌀	⌀	↕
6MTLCU5CB	28	40	15
6MTLCU2CB	41	55	22

D **Couple Matt Coffee**

ART. CODE	⌀	⌀	↕
6MTLD50CB	33	50	45
6MTLD60CB	41	60	55

E **Globe Matt Coffee**

ART. CODE	⌀	⌀	↕
6MTLC50CB	33	50	37
6MTLC60CB	41	60	43

F **Partner Matt Coffee**

ART. CODE	⌀	⌀	↕
6MTLP39CB	33	40	75
6MTLP34CB	27	34	90
6MTLP40CB	33	40	90

Photo: Metallic Silver leaf Couple Matt Copper

luxe series

Metallic collection

Silver leaf

A **Boat Matt Copper**

ART. CODE	↔	⟋	↕
6MTLB56CR	56	23	20
6MTLB75CR	75	30	25

B **Bowl Matt Copper**

ART. CODE	⌀	⊘	↕
6MTLC45CR	35	45	27

C **Bowl Ufo Matt Copper**

ART. CODE	⌀	⊘	↕
6MTLCU5CR	28	40	15

D **Couple Matt Copper**

ART. CODE	⌀	⊘	↕
6MTLD50CR	33	50	45
6MTLD60CR	41	60	55

E **Globe Matt Copper**

ART. CODE	⌀	⊘	↕
6MTLC50CR	33	50	37
6MTLC60CR	41	60	43

F **Partner Matt Copper**

ART. CODE	⌀	⊘	↕
6MTLP39CR	33	40	75
6MTLP34CR	27	34	90
6MTLP40CR	33	40	90

Photo: Metallic Silver leaf Boat Matt Honey

luxe series

Metallic collection

Silver leaf

A **Boat Matt Honey**

ART. CODE	↔	⟋	↕
6MTLB56HB	56	23	20
6MTLB75HB	75	30	25

B **Bowl Matt Honey**

ART. CODE	⌀	⌀	↕
6MTLC45HB	35	45	27

C **Bowl Ufo Matt Honey**

ART. CODE	⌀	⌀	↕
6MTLCU5HB	28	40	15
6MTLCU2HB	41	55	22

D **Couple Matt Honey**

ART. CODE	⌀	⌀	↕
6MTLD50HB	33	50	45
6MTLD60HB	41	60	55

E **Globe Matt Honey**

ART. CODE	⌀	⌀	↕
6MTLC50HB	33	50	37
6MTLC60HB	41	60	43

F **Partner Matt Honey**

ART. CODE	⌀	⌀	↕
6MTLP39HB	33	40	75
6MTLP34HB	27	34	90
6MTLP40HB	33	40	90

Photo: Metallic Silver leaf Partner Matt Light Champagne

luxe series

Metallic collection

Silver leaf

A **Boat Matt Light Champagne**

ART. CODE	↔	↗	
6MTLB62CH	56	23	20
6MTLB64CH	75	30	25

B **Bowl Matt Light Champagne**

ART. CODE	⌀	⌀	
6MTLC72CH	35	45	27

C **Bowl Ufo Matt Light Champagne**

ART. CODE	⌀	⌀	
6MTLCU7CH	28	40	15

D **Couple Matt Light Champagne**

ART. CODE	⌀	⌀	
6MTLD50LC	33	50	45
6MTLD60LC	41	60	55

E **Globe Matt Light Champagne**

ART. CODE	⌀	⌀	
6MTLC52CH	33	50	37
6MTLC54CH	41	60	43

F **Partner Matt Light Champagne**

ART. CODE	⌀	⌀	
6MTLP39LC	33	40	75
6MTLP34LC	27	34	90
6MTLP40LC	33	40	90

Photo: Metallic Silver leaf Partner Glossy Gold

luxe series

Metallic collection

Silver leaf

A **Partner Glossy Gold**

ART. CODE			
6MTLPG090	33	46	90
6MTLPG120	33	46	120

A seamless fusion of stone's strength and enduring resilience.

luxe series

Polystone Coated collection

The Polystone Coated is a variant of the Polystone collection. These planters are distinguished by a special coating, making them completely frost resistant, waterproof, water-repellent and UV-resistant.

Photo: Polystone Coated Plain Balloon Natural

luxe series

Polystone Coated collection

Plain

A **Balloon Natural**

ART. CODE	⌀	⌀	↕
6PSC463NT	27	42	42
6PSC464NT	30	48	55
6PSC465NT	30	52	68

B **Coppa Natural**

ART. CODE	⌀	⌀	↕
6PSC469NT	30	45	55
6PSC470NT	30	48	80

C **Emperor Natural**

ART. CODE	⌀	⌀	↕
6PSC474NT	24	39	90

D **Darcy Natural**

ART. CODE	⌀	⌀	↕
6PSC018NA	23	33	33
6PSC020NA	32	47	57
6PSC014NA	47	62	60
6PSC016NA	43	56	72

Photo: Polystone Coated Plain Darcy Raw Grey

luxe series

Polystone Coated collection

Plain

A **Balloon Raw Grey**

ART. CODE			
6PSC463RG	27	42	42
6PSC464RG	30	48	55
6PSC465RG	30	52	68

B **Coppa Raw Grey**

ART. CODE			
6PSC469RG	30	45	55
6PSC470RG	30	48	80

C **Emperor Raw Grey**

ART. CODE			
6PSC474RG	24	39	90

D **Darcy Raw Grey**

ART. CODE			
6PSC321RG	23	33	33
6PSC711RG	32	47	57
6PSC114RG	47	62	60
6PSC115RG	43	56	72

Photo: Polystone Coated Plain Coppa Rock

luxe series

Polystone Coated collection

Plain

A **Balloon Rock**

ART. CODE			
6PSC463RK	27	42	42
6PSC464RK	30	48	55
6PSC465RK	30	52	68

B **Coppa Rock**

ART. CODE			
6PSC469RK	30	45	55
6PSC470RK	30	48	80

C **Emperor Rock**

ART. CODE			
6PSC474RK	24	39	90

D **Darcy Rock**

ART. CODE			
6PSC321RC	23	33	33
6PSC711RC	32	47	57
6PSC114RC	47	62	60
6PSC115RC	43	56	72

Photo: Polystone Coated Junar Couple Smoke

luxe series

Polystone Coated collection

Junar

A **Couple Smoke**

ART. CODE	⌀	⌀	↕
6PSC100SM	47	55	44
6PSC140SM	61	70	56
6PSC160SM	77	90	72
6PSC120SM	135	150	120

B **Couple Raw Grey**

ART. CODE	⌀	⌀	↕
6PSC852RG	47	55	44
6PSC854RG	61	70	56
6PSC855RG	77	90	72
6PSC853RG	135	150	120

C **Couple Natural**

ART. CODE	⌀	⌀	↕
6PSC852NT	47	55	44
6PSC854NT	61	70	56
6PSC855NT	77	90	72
6PSC853NT	135	150	120

D **Couple Rock**

ART. CODE	⌀	⌀	↕
6PSC852RK	47	55	44
6PSC854RK	61	70	56
6PSC855RK	77	90	72
6PSC853RK	135	150	120

Ceramic strength, defined by the touch of sand.

luxe series

Sandora collection

The planters from the Sandora collection are characterised by a distinctive surface structure that is created through the process of sandblasting. This gives the planters a rustic appearance. The collection is made of high-quality ceramics. The planters are frost-resistant and are equipped with a drainage hole. This makes the collection suitable for both indoor and outdoor use. Use a liner to make the planters watertight.

Photo: Sandora Emperor Green

luxe series

Sandora collection

A **Balloon Green**

ART. CODE	⌀	⌀	↕
6SANBAG12	32	49	43
6SANBAG10	37	54	50
6SANBAG08	42	60	55

B **Bowl Green**

ART. CODE	⌀	⌀	↕
6SANBOG20	32	40	24
6SANBOG18	43	52	29

C **Couple Green**

ART. CODE	⌀	⌀	↕
6SANCOG06	30	36	34
6SANCOG04	38	45	42
6SANCOG02	48	55	48

D **Emperor Green**

ART. CODE	⌀	⌀	↕
6SANEMG16	31	45	75
6SANEMG14	39	57	95

Photo: Sandora Emperor Brown

luxe series

Sandora collection

A **Balloon Brown**

ART. CODE	⌀	⌀	↕
6SANBAW11	32	49	43
6SANBAW09	37	54	50
6SANBAW07	42	60	55

B **Bowl Brown**

ART. CODE	⌀	⌀	↕
6SANBOW19	32	40	24
6SANBOW17	43	52	29

C **Couple Brown**

ART. CODE	⌀	⌀	↕
6SANCOW05	30	36	34
6SANCOW03	38	45	42
6SANCOW01	48	55	48

D **Emperor Brown**

ART. CODE	⌀	⌀	↕
6SANEMW15	31	45	75
6SANEMW13	39	57	95

The seamless essentials behind effortless planting.

accessories

Liners

The universal Baq liners are available in different sizes and shapes, making them a perfect fit for any planter. The transparent, flexible liners are made from at least 50% recycled plastic. An extra firm rim ensures that the larger sizes retain their shape. Also, the handy cutting edges help make the liners suitable for hydroculture.

Photo: Liner Round

accessories

Liners

A **Round**

ART. CODE	⌀	⊥
6INZL1009	10	9
6INZL1211	12	11
6INZL1515	15	15
6INZL2515	25	15
6INZL1716	17	16
6INZL2116	21	16
6INZL1918	19	18
6INZL3022	30	22
6INZL3525	35	25
6INZL4030	40	30
6INZL4535	45	35
6INZL5038	50	38
6INZL3540	35	40
6INZL5540	55	40
6INZL4045	40	45
6INZL6045	60	45
6INZL7045	70	45
6INZL6548	65	48
6INZL8060	80	60

B **Square**

ART. CODE	↔	↗	⊥
6INZL3230	32	32	30
6INZL3830	38	38	30
6INZL4835	48	48	35

C **Rectangle**

ART. CODE	↔	↗	⊥
6INZL8020	80	20	20

D **Baq Liner-display**

ART. CODE	↔	↗	⊥
6INZD0011	90	63	215

E **Round**

ART. CODE	⌀	⌀	⊥
6BAQIR624	24	26	24
6BAQIR328	28	30	28
6BAQIR230	24	26	30
6BAQIR630	33	36	30
6BAQIR331	30	34	31
6BAQIR438	40	42	38
6BAQIR448	42	44	38

F **Square**

ART. CODE	↔	↗	⊥
6BAQIS624	26	26	24
6BAQIS431	34	34	31
6BAQIS235	24	24	35

Photo: Ecoline Phoenix Regular Kubis

let's create

Hoofdweg 111
1424 PE De Kwakel

www.baq-design.com

info@baq-design.com
+31 885 014 000

«